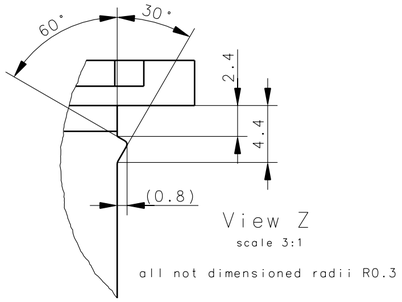

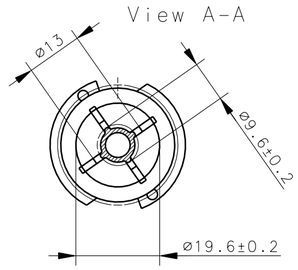

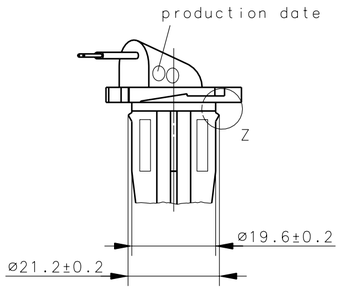

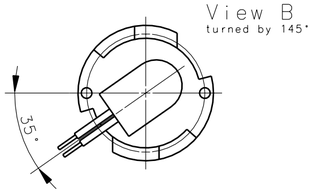

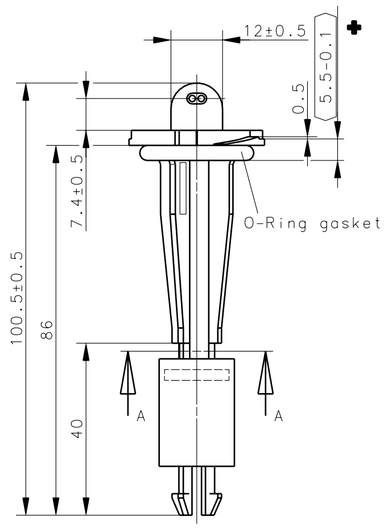

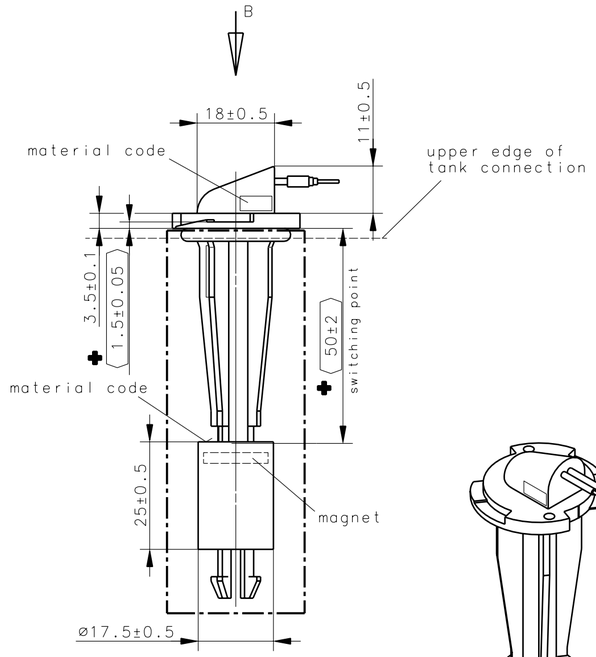

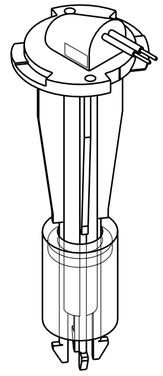

view without plug

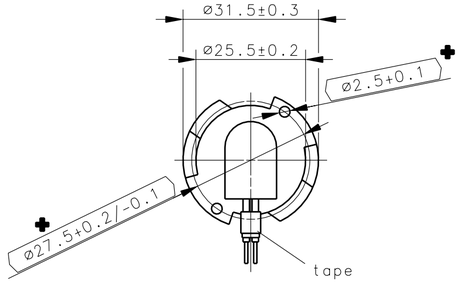

labels on top of the ribs
- material code
- tool identifying marks
- customer name

Electrical data

contact
- max. voltage : 60V
- max. switch current : 10mA
- max. switching capacity : 0.25W
- circuit time incl. pounce : 0.5ms

sensor / switch
- operating voltage : 9V to 16V
- switching time : 5ms
- hysteresis : ≤1.7mm

tolerance of the resistances ±5% ✚

Pay attention to the contact protection, when switching inductive loads.

Do not exceed the maximum data!

circuit diagram

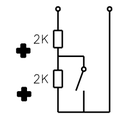

Technical data

switching function	: contact open at falling level ✚
standard	: acc. to DIN VDE 0660 T200
protection class	: IP69k acc. to DIN 40050 T9 ✚
temperature resistance (sensor only)	: -40°C to +120°C
mechanical lifetime	: 100000 switchings
mode of connection	- wire : 2x acc. to DIN ISO 6722 C diameter 0.75mm² color BR and WH length 150mm +6mm ✚ measured between sensor inlet and connector housing inlet - plug : BOSCH COMPACT Part No. 1-928-403-698 endclip : BOSCH Endclip Part No. 1-928-403-422 contact : AMP Junior Power Timer Part No. 929-939-3 - tape : PET-Vlies (TESA) Part No. 51608-04 wire wraped with tape, with 30% to 50% overlap when fully wrapped temperatur resistance : -30°C to +105°C

Mechanical data

housing material	: PA66
float material	: NBR
density of the float	: 0.7g/cm³ ±5%
gasket type	: O-Ring (d_1=19, d^2=4)
gasket material	: NBR

overvoltage strength	: 18V for 1 hour 26V for 3 minutes
test voltage	: 13.5V
chemical resistance	: test fluids - anti freezing compound - ATF (automatic transmission fluid) usual - battery acid (sulfuric acid 37%) - break fluid - cold cleaning product - diesel oil to DIN EN 590 - dust to SAEJ726b - hydraulic fluid : PENTOSIN CHF 11s - hydraulic fluid usual - motor oil to SAE 10 W 50 - premium gasoline to DIN EN 228 - spirit - washer liquid (undiluted) : test procedure 100 cm³ fluid at approx. 25°C, spray or apply with paintbrush on MPA, allow to affect surface for minimum 10 hours, wipe off fluid, use next fluid : evaluation no effect on surface, IP test or stickers
working fluid	: Pentosin CHF 11s
vibration resistance	: frequency / power spectral density 10 Hz / 4.34 m²/s³ 25 Hz / 4.34 m²/s³ 1 Hz / 0.11 m²/s³ RMS. of overall acceleration : 22 m/s² test duration : 22 hours in each plane temperature : repeating thermal cycle - 3 hours @ +120°C, within 160 minutes down to -40°C - 3 hours @ -40°C, within 55 minutes up to +120°C
contamination	: according to TRW 62 045 004 A (B) no burrs or sharpe edges allowed

significant characteristics are marked with ✚

Index	Mittl.Nr	Änd. Datum	Name

Bernstein
Bernstein AG
Postfach 1164
D-32437 Porta Westfalica

CAD Zeichnungsvordruck — A2

Umgearbeitet aus

Type

Passend zu

Z-Nr.

Gezeichnet	Datum	Name
	15/07/2002	ToH
Geprüft	15/7/2002	MSt
Freigegeben	15/7/2002	MSt

Werkstoff

Allgemeintoleranzen ISO 2768-mH
Ausgabe: Teil 1 Juni 1991, Teil 2 April 1991
Werkstückkanten DIN 6784, Ausgabe: Februar 1982
Oberflächenbeschaffenheit DIN ISO 1302
Ausgabe: Dezember 1993

6.3	3.2	1.6	0.8
*	*	*	*

Maßstab	Benennung	Zeichnungsnummer	Original
1:1	MSK6-PA-FL32-O	6894760002.....-08	

Rahmen erstellt: 26.11.2001 Söl

Copyright reserved
Schutzvermerk nach DIN 34 beachten Ausgabe: Oktober 1977