BERNSTEIN

Complete Range
Switch Systems and safety technology

BERNSTEIN

BERNSTEIN AG – A Success Story

Safety for man and machine

BERNSTEIN AG ranks among the world's leading providers of industrial safety technology.
With our comprehensive range of switches, sensors, enclosures, suspension systems and other components for industrial applications, we offer our customers effective and versatile solutions.

In-depth market knowledge, the close proximity to end users as well as years of experience in mechanical engineering and electronics are reflected down to the last detail in our products.

By conforming to international safety guidelines, our products perfectly integrate in individual solutions. Our focus is complete commitment to safety for man, machine and industrial processes.

Our expertise for your safety

With sound application expertise we support our customers from all branches of industry in the planning and implementation of systems designed to meet stringent safety requirements. In addition to classic plant and machine construction, we look after customers in the lift construction, automotive, agriculture, conveyor construction, automation engineering, wood-working, renewable energy, AS-Interface and EX.

Our knowledge is your success

GERMANY
Porta Westfalica

BERNSTEIN
BUSINESS CENTER

GERMANY
Hille-Hartum

EUROPE
Budapest (Hungary)

BERNSTEIN Kft.

ASIA
Taicang (China)

BERNSTEIN Safe Solutions

Our philosophy

Customer Satisfaction is our number one priority. For us, Quality is more than making a good product, it's about designing them to perfectly match ALL of your needs.

Customized Solutions are fully integrated into our business and form part of our everyday working life. Employees are treated as our greatest asset as they are responsible for the quality and success of our products. All BERNSTEIN TEAM members are trained and educated to the highest possible standard so they can deliver "Best in Class" Service and Support. The BERNSTEIN TEAM will support you both personally and professionally, working together we will provide you with the best Safe Solution – for any size of project.

Future-proof solutions

Our objective is to actively influence technical innovation and modern application solutions. BERNSTEIN has therefore always been at the centre of defining trends in technology. With an unwavering commitment to the future we will continue providing the best possible answers in terms of technology, ecology and economic efficiency.

That is our definition of progress!

BERNSTEIN AG
The Product Lines

Switch Systems

Sensor Systems

Switch systems –
Economy meets safety

BERNSTEIN electromechanical switches offer a convincing price / performance ratio and impress with their extreme reliability for many different operating voltages. The range extends from limit switches, encapsulated in insulating material or metal, through foot switches to safety switching devices. The AS-i compatible products save time and material in installation and provide cost advantages in operation. The comprehensive range of designs and sizes, the possible switching functions and the choice of actuators make virtually any application reality.

Sensor systems –
Compact intelligence

The extremely fast and exceptionally precise BERNSTEIN sensors operate without interference and wear in all applications. The tried-and-tested reliability and the compact dimensions are greatly appreciated in all branches of industry. Matching the specific application, in addition to ultrasonic sensors and level switches, customers can choose from a wide range of inductive, capacitive, magnetic or optical sensors. Alongside the complete standard range of sensors, we also offer comprehensive development and design for individual solutions.

Enclosure Systems

**Enclosure systems –
Function and design**

With its long tradition in manufacturing enclosures, BERNSTEIN combines superior enclosure technology, designed for encapsulating a diverse range of applications, with ultramodern and variable suspension systems. An extensive range of aluminium and plastic terminal boxes as well as the wiring and circuitry in standard and control enclosures conforming to specific customer requirements round off the product portfolio. Our enclosures conform to standards used in medical technology, industry as well as food and EX applications.

Product Line
Switch Systems

Switch systems – Economy meets safety

BERNSTEIN AG is an established manufacturer of high quality electromechanical low voltage switching devices. Our products are used in the most diverse range of applications, ranging from lift construction through wood-working and packaging machines through to machine tools.

In addition to functional reliability and high quality, BERNSTEIN switch systems also efficiently save time in terms of installation and maintenance.These advantages further underscore the benefits for the end product as they drastically reduce downtime for servicing and maintenance purposes. This is achieved through features such as the quick-connect head for time-saving installation at rope pull switches or the AS interface components which, in addition to shortening installation times, also reduce the number of hardware components and the space requirements in machines.

Switches are an integral part of modern processes

The primary purpose of a switch is to convert mechanical movement into electrical signals that are processed in machine and process control systems. However, switches directly connected to bus systems are being used to an ever greater extent in modern applications where mechanical movement is converted into digital information.

Besides reducing costs, our AS interface switch components also offer advantages such as the diagnostic features and uncomplicated system expansion in process applications.

BERNSTEIN switches are configured by combining different types of enclosures, switch systems and actuators. Corresponding to the environmental and operating conditions, the switches are available in a metal or plastic enclosure.

The switching system is selected based on the function (slow-action or snap-action contact) and the required floating contacts. The actuator is also selected corresponding to the type and direction of actuation. Thanks to the large number of possible combinations, the scope of application is virtually unlimited.

The applications in which limit switches are used have changed in line with increasing automation. While not too long ago limit switches were mainly used for monitoring position, today they often additionally assume a safety function.

Complementing our product range we offer attractive customer services:

- Assistance in assessing risk and configuring safety functions
- Preassembly of products with standard power supply lines or customised cables
- Supply of completely preassembled wiring harnesses
- Component supplied with M12 connector
- Customised adaptation of products

Safety and Standard Switches

General **12**

Safety and Standard Position Switches

Insulation-enclosed limit switches (plastic)

• C2 17

• Ti2 21

• I49 25

• IN62, IN65, I81 31

• SGS 39

• Bi2 40

• ENK 44

Metal-enclosed limit switches

• GC 48

• SN2 54

• ENM2 59

• D 64

Overview of actuators **68**

Accessories **71**

Electrical data **72**

Safety Switches with Separate Actuator

Plastic

• SKT 76

• SKI 77

• SK 78

• SKC 79

Plastic/metal various types 82
• VTU

Safety Switches with Separate Actuator and Latching Device

Plastic
• SLK 84

Safety Switches for Hinged Protective Equipment

• SHS3 90

• SHS 96

• I88 VKS, -VKW, -AHDB
GC VKS, -VKW
Ti2 AHDB 100

Contactless safety technology

Non-contact Safety Sensor SRF **105**

Magnetic Monitoring Systems **115**

Safety Command Devices

Safety cable pull switches **118**
• SRM
• SR

Rope pull switches spanned on both ends **124**
• Si1
• Si2

Standard cable pull switches **128**

Accessories for rope pull switches **135**

Belt alignment switches **137**

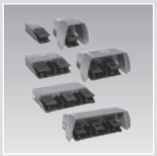

Foot switches **138**
1–3 pedal

Safety Evaluation Devices

SCR Safety relays **145**

Bus-Compatible Safety Switches – AS Interface

AS-Interface Safety at Work **146**

AS-Interface Accessories **150**

Common Features of Electromechanical Switches

Switching systems

Switching elements lie at the heart of all electromechanical switching devices and must correspond to the respective application. Essentially there are two basic types of switching system that differ in terms of their mechanical design and consequently their scope of application:

- Slow-action contacts
- Snap-action contacts

Slow-action contacts

- On actuation, the normally-closed and normally-open contact functions correspond to the movement of the impact pin
- The approach speed controls the contact opening (closing) time
- Large distance / actuating travel between normally-closed and normally-open contact function
- The switching points are identical in forward and reverse travel

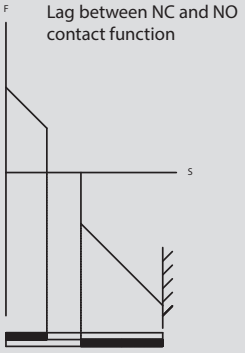

Fig. 1 shows the contact force during the switching cycle of a slow-action contact.

Overlap

- The switching principle of snap-action contacts makes overlapping of the NC / NO contact function possible. The term overlap refers to the area, in which both the normally-closed contact as well as the normally-open contact are closed in connection with a changeover switch with delay.

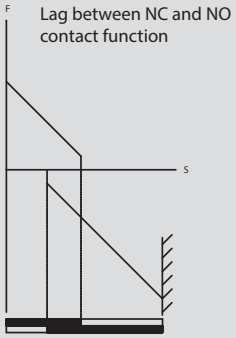

Fig. 2 shows the contact force during the switching cycle of a slow-action contact with overlap.

Snap-action contact

- On actuation, the normally-closed contact function is immediately followed by the normally-open contact function
- In this configuration there is no overlap of the NC/NO contacts. The switch provides a distinct OR-function.
- The changeover accuracy is not dependent on the approach speed
- Consistently effective suppression of DC arc
- Reliable contact-making also for extremely slow approach speeds
- The snap mechanism triggers the full opening width of the contact on reaching the changeover point
- Due to the force reversal in the mechanical system, a different switching point occurs in forward and reverse travel. The lag is referred to as hysteresis.

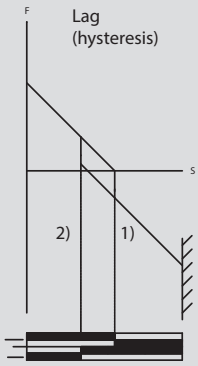

Fig. 3 shows the contact force during the switching cycle of a snap-action contact.

[1] Changeover point in forward travel
[2] Changeover point in reverse travel

Switching diagram

The switching diagram describes the function of the switching device in detail.

It combines the mechanical input variables that act on the contact system via the actuator with the electrical output variables. The user can deduct the following information from the switching diagram:

- Mechanical input variables (force, travel, torque, angle)
- Electrical contact-making in forward and reverse travel
- Terminal designation
- Point at which positive opening is achieved
- Type of contact system

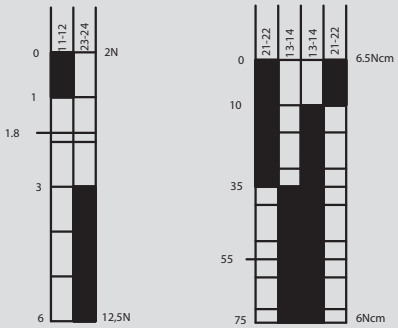

Slow-action contact Snap-action contact

■ Contact closed
□ Contact open

Contact designation

In accordance with DIN 50013 and DIN 50005 the terminal designations of the contact elements are always make up of two digits.

The contact rows are numbered consecutively with the allocating digit (1st digit) in actuation direction. Contacts of a switching element that belong together have the same allocating digit.

The second digit is the function digit that denotes the type of contact element.

1–2 Normally-closed contact
3–4 Normally-open contact
5–6 Normally-closed contact with delayed opening
7–8 Normally-open contact with delayed closing

Protection class

The protection class of an enclosed device denotes the degree of protection. The degree of protection includes the protection of persons against contactwith parts under voltage and the protection of equipment against the infiltration of foreign bodies and water. BERNSTEIN standard enclosures mainly correspond to protection classes IP65 and IP67. Higher protection ratings are also available for individual customer solutions. In accordance with DIN EN 60521 (IEC 529), the numerals used in the protection rating denote the following:

1st digit Degree of protection against contact and infiltration of foreign bodies

2nd digit Degree of protection against infiltration of water

Example IP65:

6 =
- Complete protection against contact with components under voltage or with internal moving parts
- Protection against dust infiltration

5 =
- A water jet directed from all directions at the device must not have damaging effects
- Protection against hose water

Enclosures

Limit switches are supplied either in a plastic enclosure or a metal enclosure. Which material is to be selected for a specific application depends on the ambient conditions, the location as well as several other factors.

Plastic limit switches provide protective insulation and are resistant to many aggressive chemicals and liquids.
The formation of condensation water in moist environments with extreme temperature fluctuations is significantly reduced on plastic enclosures.

In insulation-enclosed switches the switching elements are integrated directly in the plastic enclosure and are therefore not replaceable (complete switching devices).

Metal-enclosed limit switches are able to withstand high mechanical loads, they can also be used wherever hot metal chips and sparks occur and are resistant to many solvents and detergents. The switching elements in metal-enclosed switches are often integrated in the metal enclosure as modular built-in switches. The enclosure has a VDE-compliant connection for the PE conductor.

Safety switches

The scope of application for limit switches has changed over time. Whereas limit switches were previously used for the purpose of detecting end positions, today they are increasingly assuming functions designed to protect persons and products in machine, equipment and plant construction.

The BERNSTEIN range of safety switches offers the right solution for the most diverse applications in many branches of industry. Particularly when it comes to safety, users appreciate the fact that they are able to procure all required safety switches and receive professional advice from one source.

The decisive factors governing the selection of safety equipment include the ambient conditions, installation situation and risk analysis.

A switching device that can be used for safety functions is identified by the standardised symbol conforming to EN 60947-5-1 Addendum K. The switches can, of course, also be used for pure position monitoring purposes.

Safety switches are divided into two categories, Type 1 and Type 2. The difference is in the actuating elements which are completely integrated in the enclosure in Type 1 and separated from the switching element in Type 2.

Type 1

Type 2

Designation

The designation of BERNSTEIN switching devices depends on:

- The enclosure designation of the switching device
- The switching function
- The type of actuator

Type code of position and safety switches

IN65	A2Z[1]	AH	M12
Switch group	Switching system[2]	Actuator	Special features
● C2	● U1	See Pages 68 – 69	● M12 connection
● Ti2	● SU1		● Actuator turned 90°, 180°, 270°
● I49	● A2		● Special switching forces
● IN62, IN65, I81	● SA2		● Special temperature ranges
● Bi2	● E2		● Other special features on request
● ENK	● SE2		
● GC	● UV1		
● SN2			
● ENM2			
● D			

[1] The letter Z suffix to the designation of the switching function denotes the mechanical positive opening action of the normally-closed contacts. In technical data sheets, the positive opening point is identified by the international symbol ⊖.

[2] Please refer to the following pages in the catalogue to establish which switching system can be used in the switch groups.

Common Features of Electromechanical Switches

Switching function example

NC = Normally-closed contact
NO = Normally-open contact
V = Overlap

U1Z

Slow-action contact, 1 NC, 1 NO

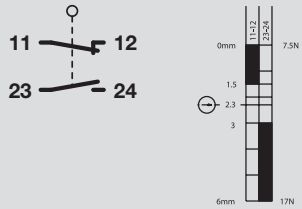

SU1Z

Snap-action contact, 1 NC, 1 NO

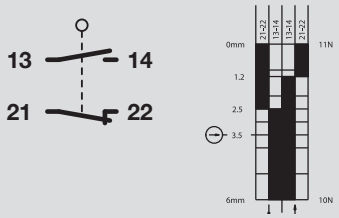

A2Z

Slow-action contact, 2 NC

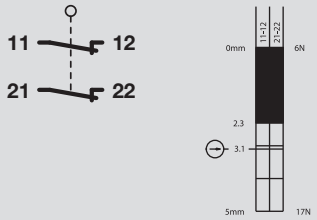

SA2Z

Snap-action contact, 2 NC

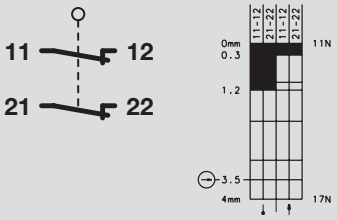

E2

Slow-action contact, 2 NO

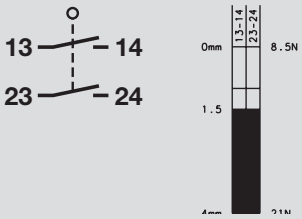

SE2

Snap-action contact, 2 NO

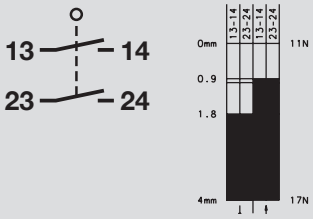

UV1Z

Slow-action contact,
with overlapping contacts,
1 NC, 1 NO

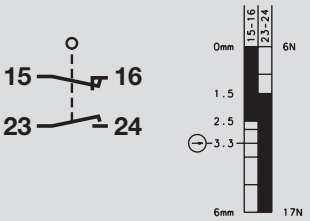

U15Z

Slow-action contact, 2 NC, 1 NO

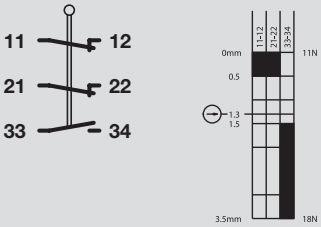

UV15Z

Slow-action contact,
with overlapping contacts,
2 NC, 1 NO

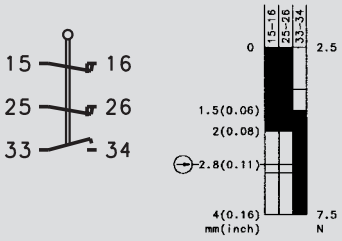

U16Z

Slow-action contact, 1 NC, 2 NO

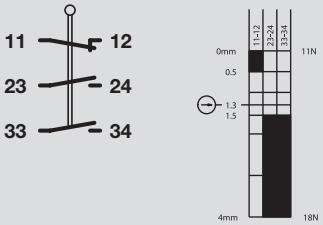

UV16Z

Slow-action contact,
with overlapping contacts,
1 NC, 2 NO

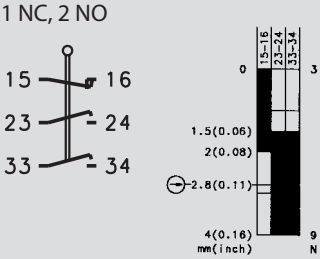

The actuating forces and travel distances are subject to tolerances. These tolerances are listed in Table 1.
In Type 1 and Type 2 position switches, the tolerances are independent of the switching system and switching function.

Function	Tolerance
Switching travel	± 0.25 mm
Switching angle	± 3.5°
Switching force in N	± 10%
Actuating torque in	± 10%

Table 1

⊖ = Mechanical positive opening action

The term positive opening action refers to contact separation as the direct result of defined movement of the switch actuator by means of non-sprung parts. All parts involved in contact separation must be form-fit connected. The positive opening distance describes the minimum travel distance from the start of actuation of the operating element up to the point where positive opening action of the opening contacts is completed.

DIN EN 60947-5-1 defines two types of positive opening action contacts with 4 connections and double break.

Type Za

- Positively opening contacts not galvanically isolated

Type Zb

- Positively opening contacts galvanically isolated

Galvanic isolation describes the isolation of electrically conducted parts by insulating material or by air gaps.

In switching devices with several contact elements, galvanically isolated contact elements make it possible to switch voltages with different potential (e.g. normally-closed contact in safety circuit, normally-open contact for indicator).

In accordance with applicable health and safety requirements, protective devices (guards) must be mounted on machines, devices and systems that perform hazardous movements. Safety switches in the form of electromechanical switching devices are predominantly used for this purpose as they offer the following advantages:

- High degree of safety
- Non-susceptibility to interference
- Safety status easily checked on site
- Rational solutions

Form-fit, mechanical drives or coupling elements in the form of levers, rods, gearwheels etc. are necessary to ensure optimum operation of these safety components.

Switching devices that are used for safety functions must be identified with the symbol ⊖ internationally standardised in accordance with DIN EN 60947-5-1.
In defining the class of switching devices, this symbol denotes two important properties that must be met for personal protection applications:

- Mechanical positive opening action
- Disruptive breakdown voltage > 2.5 kV

Disruptive breakdown voltage

In accordance with DIN EN 60947-5-1, the open contacts must be able to maintain a minimum surge voltage of 2.5 kV without disruptive breakdown.

Standard actuator DIN EN 50047

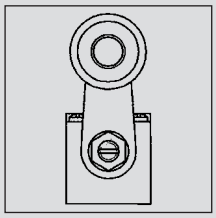
Form A

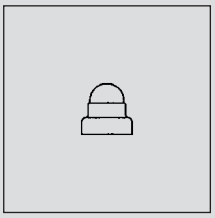
Form B

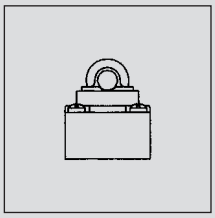
Form C

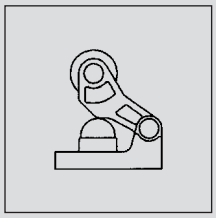
Form E

Standard actuator DIN EN 50041

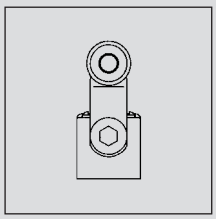
Form A

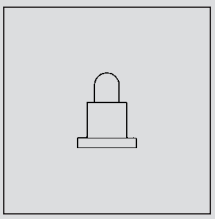
Form B

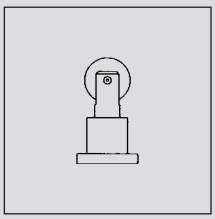
Form C

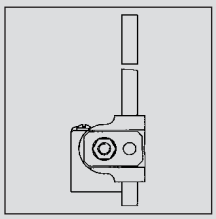
Form D

ISO 14119

Content and significance of ISO 14119

ISO 14119 describes the requirements in selecting and installing safety switches and sensors (with and without interlock function).

ISO 14119 defines 4 different types of products

Type 1	Type 2	Type 3	Type 4
mechanical		contactless	
uncoded	**coded**	**uncoded**	**coded**
Position Switches (with ⊖) IN62, IN65, I81 ENK ENM etc. 	Interlocking devices SK SKC SKI etc. 	Magnetic switches (Hall and Reed) MAK	Magnetic switches MAK 42/52/53
Safety Hinge Switch SHS3 SHS 	Interlocking devices with interlock function SLK 	Inductive Capacitive Optical KIN KCN OM 	SRF Sensor RFID

In addition to the above, BERNSTEIN has a complete range of complimentary products all in accordance with ISO 14119.

ISO 14119 defines possible methods used to prevent tampering

– Avoidance of any accessibility to elements of the locking system

- Switch installed in an inaccessible position
- Barriers or shielding of the switch
- Installation of the switch in a concealed area

– Avoidance of disassembly or position modification of locking system elements by means of permanent fixings (for ex. welding, gluing, non-removable screws, riveting);

– Avoidance of any actuation of the locking system by readily accessible objects, by using coded actuators

Compared to the preceding standard, the following coding schemes of the actuators regarding, amongst other things, manipulation protection will be defined:

- coded actuators with low-level coding (with SK, SLK, MAK)
- coded actuator with medium-level coding
- coded actuator with high-level coding (SRF)

In the field of locking systems with low-level coding, the existing products such as SLK, SK, MAK are still to be used in combination with the MÜZ.

– Avoidance of circumvention for ex. through plausibility tests by the control unit

Note on series connection of locking systems

The standard expressly indicates the possible error concealment (error masking) when mechanical contacts are connected in series. A series connection can lead to reduction of the performance level according to ISO 13849-1.

The use of electronic safety sensors such as the SRF guarantees the highest performance level also in case of a series connection.

ISO 14119 provides support during the selection of the locking system and contains all relevant requirements related to the placement of locking systems.

For further information see among other things the DGUV information 203-079 “Selection and placement of locking systems”.

Selection of an interlock function

According to ISO 14119, a locking system must be used in combination with an interlock function if the over-travel time for the entire system is longer than or the same as the period of time it takes for a person to reach the hazardous area.

C2

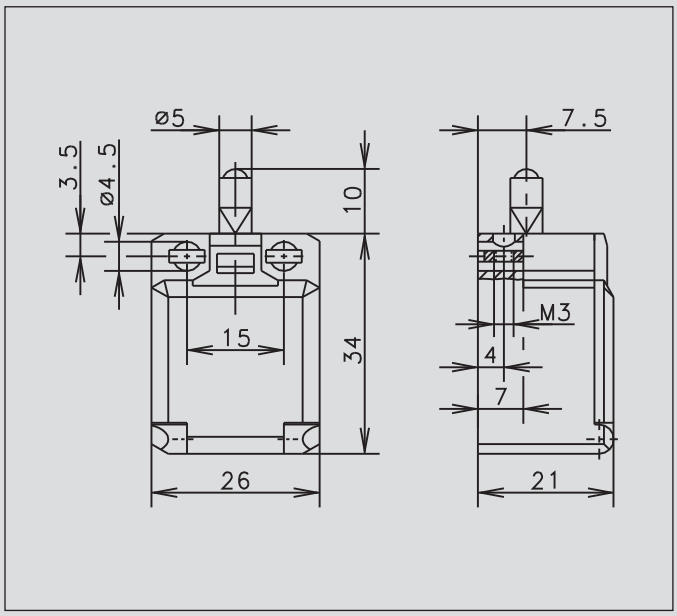

Recommended use

Ideal for safety applications and position monitoring in confined spaces.

Product advantages

- Miniature switch for safety applications
- Two-channel safety monitoring possible
- With captive snap-on cover
- Small hysteresis in snap action system

Design layout

- Slow-action and snap-action contacts
- Versions: 1 NC / 1NO, 2 NC, 2 NO
- All NC contacts with ⊖ in the circuit diagram are positively opening contacts
- Type: Zb (galvanically isolated changeover contact)

Mounting

- Also suitable for front mounting (depending on type)

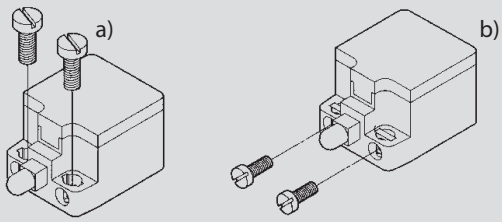

- a) 2 round holes for M4 screws
- b) 2 Integrated nuts for front mounting for M3 screws (depending on type)

Installation advantages

- Snap-on cover can be released with screwdriver
- Cover opening range 180° (cover can also be detached from hinge)
- Cover protects switching element during installation
- Screw connections with self-lifting clamping plates
- Cover transparent for adjustment and visual inspection
- Easy-action cover lock (close and press)

Technical data

Electrical data		
Rated insulation voltage	U_i max.	240 V AC
Conventional thermal current	I_{the}	10 A
Rated operating voltage	U_e max.	240 V
Utilisation category	U_e/I_e	AC-15, U_e/I_e 240 V/3 A
Short-circuit protection		Fuse 6 A gL/gG
Protection class		II, Insulated
Mechanical data		
Enclosure material	Thermoplastic, glass fibre-reinforced (UL 94-V0)	
Ambient temperature	–30 °C to +80 °C	
Mechanical service life	3 x 10^6 switching cycles	
B10d	6 Mio.	
Switching frequency	≤ 100/min	
Type of connection	Screw connections	
Conductor cross sections	Single-wire 0.5 – 1.5 mm^2 or Stranded wire with ferrule 0.5 – 1.5 mm^2	
Cable entry	Rectangle 8.5 x 3.5 mm	
Protection class	IP20 conforming to EN 60529; DIN VDE 0470 T1	
Standards		
VDE 0660 T100, DIN EN 60947-1, IEC 60947-1 VDE 0660 T200, DIN EN 60947-5-1, IEC 60947-5-1		

C2

	W	ST
	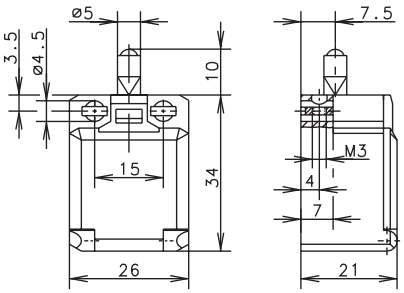	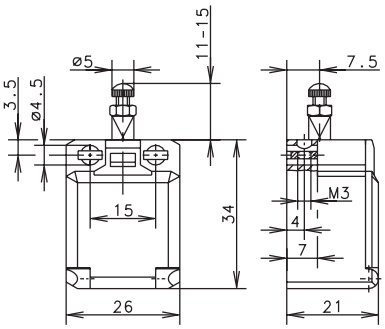

Switching operation	W Slow-action	W Snap-action	ST Slow-action	ST Snap-action
1 NC / 1 NO contact	**6008101001** C2-U1Z 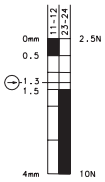	**6008351002** C2-SU1Z 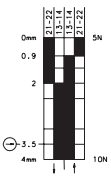	**6008104025** C2-U1Z ST 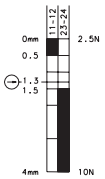	**6008354026** C2-SU1Z ST 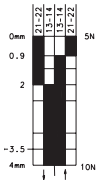
2 NC contacts	**6008801003** C2-A2Z 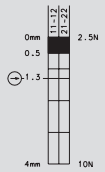	**6008851004** C2-SA2Z 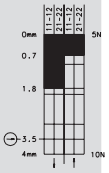	**6008804027** C2-A2Z ST	
2 NO contacts	**6008801005** C2-E2 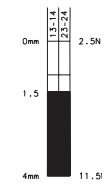	**6008851006** C2-SE2 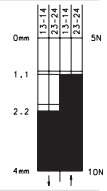	**6008804029** C2-E2 ST 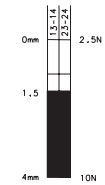	
1 NC / 1 NO contact Overlapping				
Approvals	UL, CSA		UL, CSA	

Replacement actuator: –

Special features / variants
(on request)

Replacement actuator: –

Special features / variants

- Actuator length adjustable with adjusting screw

K

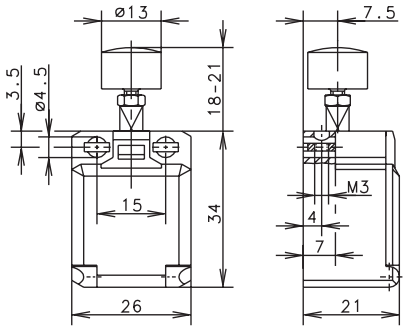

Slow-action	Snap-action
6008107019 C2-U1Z K 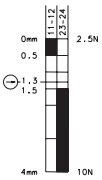	**6008357020** C2-SU1Z K
6008807021 C2-A2Z K	**6008857022** C2-SA2Z K 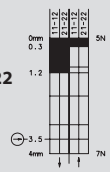

Replacement actuator: –

Special features / variants

- Button actuator, for manual operation

R

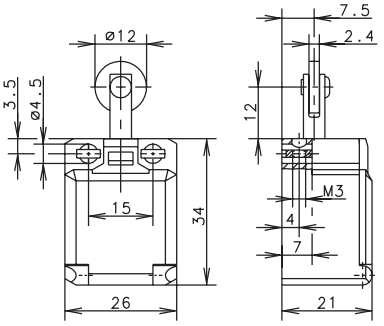

Slow-action	Snap-action
6008116013 C2-U1Z R 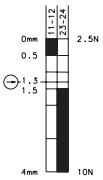	**6008366014** C2-SU1Z R 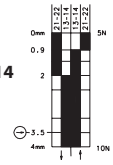
6008816015 C2-A2Z R	**6008866016** C2-SA2Z R 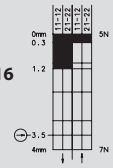
6008816017 C2-E2 R 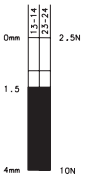	

Replacement actuator: –

Special features / variants
(on request)

- Also available with roller turned by 90°

O.M.

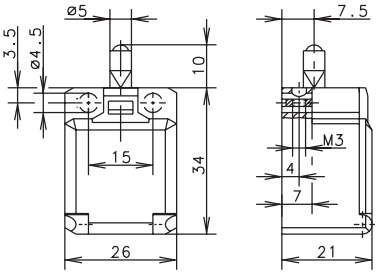

Slow-action	Snap-action
6008101007 C2-U1Z O.M. 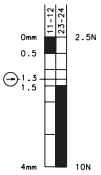	**6008351008** C2-SU1Z O.M. 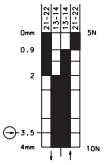
6008801009 C2-A2Z O.M.	

Replacement actuator: –

Special features / variants
(on request)

C2

	BISTABLE O.M.	
	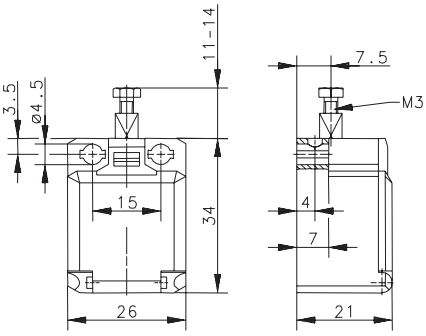	
Switching operation	**Slow-action** **Snap-action**	
1 NC / 1 NO contact	**6108351008** C2-SU1Z BISTABLE O.M. 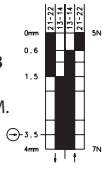	
2 NC contacts		
2 NO contacts		
1 NC / 1 NO contact **Overlapping**		
Approvals		

Replacement actuator: –

Special features / variants

- Bistable characteristics, actuator must be returned to initial position by external actuation (pulling)
- Actuator length adjustable with M3 adjusting screw

Ti2

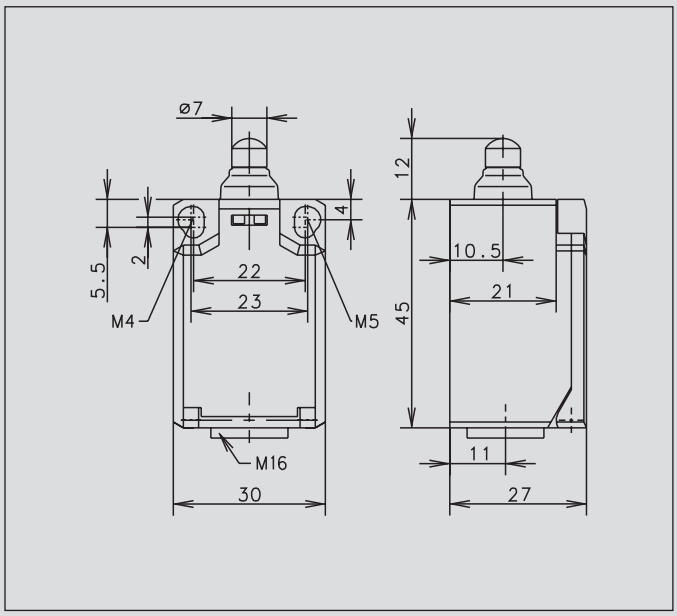

Recommended use

Ideal for safety applications and position monitoring in confined spaces with high protection class IP65.

Product advantages

- Compact IP65 switch for safety applications
- Optimised size while retaining tried-and-tested connection system
- Two-channel safety monitoring possible
- With captive snap-on cover
- 2 mm contact opening width of slow-action system conforming to EN 81-1 for lift construction
- Mall hysteresis in snap action system
- Actuator can be repositioned by 4 x 90°

Options

- Available with M12 connector
- AS interface variants available
- Preassembled with customer-specific cables and connectors on request

Design layout

- Slow-action and snap-action contacts
- Versions: 1 NC / 1NO, 2 NC, 2 NO
- All NC contacts with ⊖ in the circuit diagram are positively opening contacts
- Type: Zb (galvanically isolated change-over contact)

Mounting

- Mounting dimensions conforming to DIN EN 50047
- 2 slots for adjustment with M4 screws (distance between centres 22 mm)

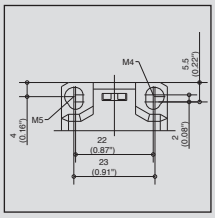

- Fixed positioning for safety applications with two M5 screws (distance between centres 23 mm)

Installation advantages

- Snap-on cover can be released with screwdriver
- Cover protects switching element during installation
- Screw connections with self-lifting clamping plates
- Cover transparent for adjustment and visual inspection
- Easy-action cover lock (close and press)

Technical data

Electrical data		
Rated insulation voltage	U_i max.	240 V AC
Conventional thermal current	I_{the}	10 A
Rated operating voltage	U_e max.	240 V
Utilisation category	U_e/I_e	AC-15, U_e/I_e 240 V/3 A; DC-13, U_e/I_e 240 V/0,27 A
Short-circuit protection		Fuse 6 A gL/gG
Protection class		II, Insulated
Mechanical data		
Enclosure material	Thermoplastic, glass fibre-reinforced (UL 94-V0)	
Ambient temperature	–30 °C to +80 °C	
Mechanical service life	3 x 10^6 switching cycles	
B10d	6 Mio.	
Switching frequency	≤ 100/min.	
Type of connection	Screw connections	
Conductor cross sections	Single-wire 0.5 – 1.5 mm^2 or Stranded wire with ferrule 0.5 – 1.5 mm^2	
Cable entry	1 x M16 x 1,5	
Protection class	IP65 conforming to EN 60529; DIN VDE 0470 T1	
Standards		
VDE 0660 T100, DIN EN 60947-1, IEC 60947-1VDE 0660 T200, DIN EN 60947-5-1, IEC 60947-5-1		

Ti2

	W (Form B)	RIW (Form C)
	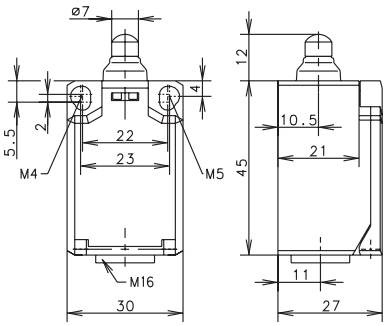	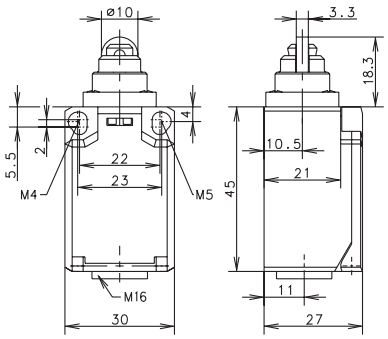

Switching operation	Slow-action	Snap-action	Slow-action	Snap-action
1 NC / 1 NO contact	**6088103001** TI2-U1Z W 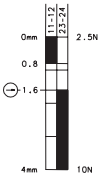	**6088153002** TI2-SU1Z W 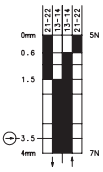	**6088117007** TI2-U1Z RIW 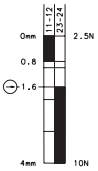	**6088167008** TI2-SU1Z RIW 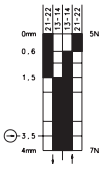
2 NC contacts	**6088803003** TI2-A2Z W	**6088853004** TI2-SA2Z W 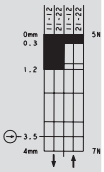	**6088817009** TI2-A2Z RIW	**6088867010** TI2-SA2Z RIW 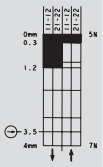
2 NO contacts	**6088803005** TI2-E2 W 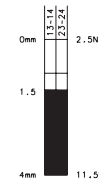			**6088867012** TI2-SE2 RIW 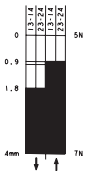
1 NC / 1 NO contact Overlapping				
Approvals				

Replacement actuator: –

Special features / variants
(on request)

- Available with increased switching force

Replacement actuator: –

Special features / variants
(on request)

- Available with increased switching force
- Available with different actuating directions
- Cannot be turned by user

HW (Form E)

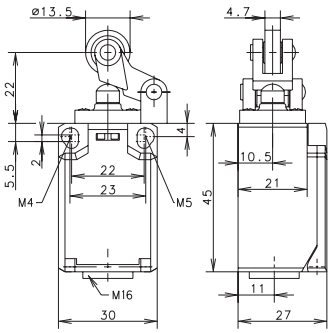

Slow-action **Snap-action**

6088121015
TI2-U1Z HW

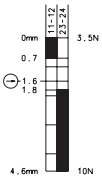

6088171016
TI2-SU1Z HW

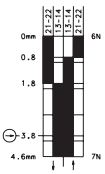

6088821017
TI2-A2Z HW

6088871018
TI2-SA2Z HW

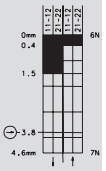

6088871020
TI2-SE2 HW

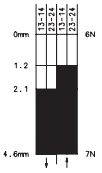

Replacement actuator: 3918190681

Special features / variants
(on request)

- Available with different actuating directions
- With steel roller
- Various roller diameters

AH (Form A)

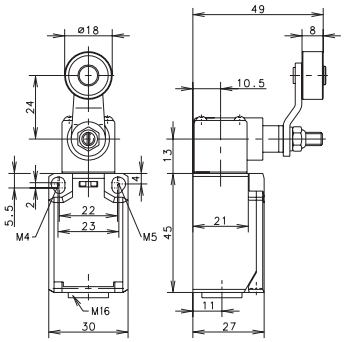

Slow-action **Snap-action**

6088135021
TI2-U1Z AH

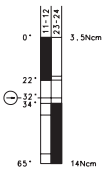

6088185022
TI2-SU1Z AH

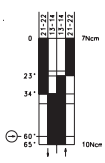

6088835023
TI2-A2Z AH

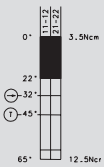

6088885024
TI2-SA2Z AH

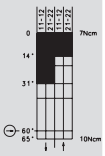

Replacement actuator: 3918351166

Special features / variants
(on request)

- Available with different actuating directions
- With steel roller
- Various roller diameters
- Cranked or straight lever
- Various lever lengths
- With roller over switch

AD

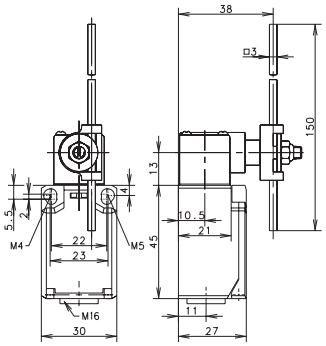

Slow-action **Snap-action**

6088137027
TI2-U1 AD

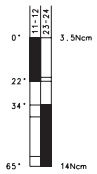

6088187028
TI2-SU1 AD

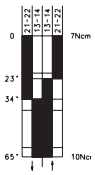

6088837029
TI2-A2 AD

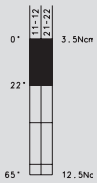

6088887030
TI2-SA2 AD

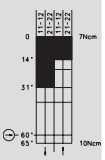

Replacement actuator: 3918370986

Special features / variants
(on request)

- Available with different actuating directions
- With various actuator lengths
- Available with increased switching force

Ti2

AV

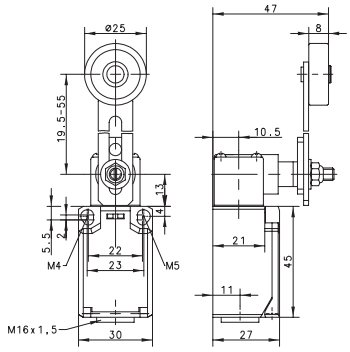

Switching operation	Slow-action	Snap-action	
1 NC / 1 NO contact	**6088136033** TI2-U1 AV 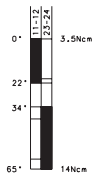	**6088186034** TI2-SU1 AV 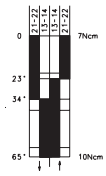	
2 NC contacts		**6088886036** TI2-SA2 AV 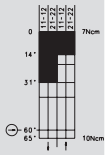	
2 NO contacts		**6088886038** TI2-SE2 AV 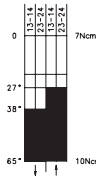	
1 NC / 1 NO contact **Overlapping**			

Approvals

Replacement actuator: 3918360984

Special features / variants
(on request)

- Available with different actuating directions
- Various roller diameters
- Various lever lengths
- With roller over switch

I49

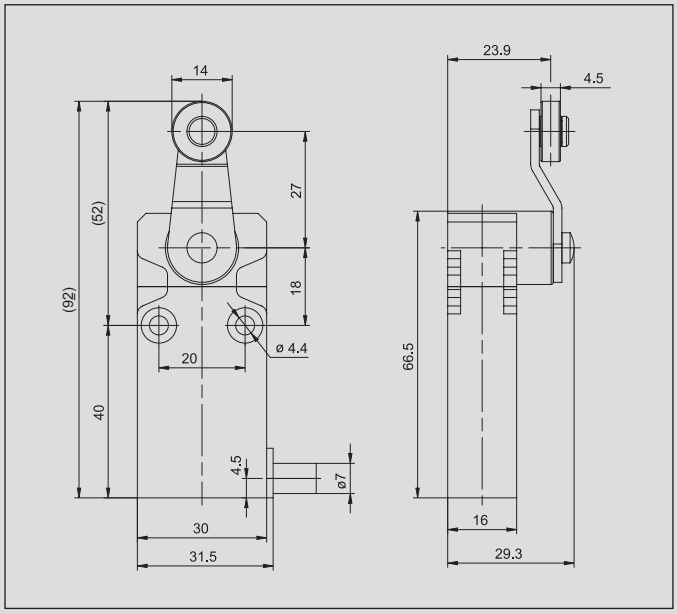

Recommended use

With its slim design and full IP67 protection the I49 switches are simply ideal for position monitoring and end position shutdown in safety applications.

Product advantages

- Ultra-flat design
- Highly flexible deployment
- Reliability
- Simple and quick installation
- Two mounting levels
- Side and straight cable outlet
- With 1 m fixed cable
- High quality plastic enclosure
- Small hysteresis in snap action system
- Compact IP67 switch for safety applications

Options

- Various cable lengths available on request

Design layout

- Slow-action and snap-action contacts
- Versions: 1 NC / 1NO
- All NC contacts with ⊖ in the circuit diagram are positively opening contacts
- Type: Zb (galvanically isolated changeover contact)

Application examples

- Monitoring of safety gates, hatches or protective hoods
- Position monitoring of moving parts
- Object detection in conveying technology
- End position control of components
- Position monitoring on rolling doors
- Monitoring of sliding doors

Technical data

Electrical data		
Rated insulation voltage	U_i max.	400 V AC
Conventional thermal current	I_{the}	10 A
Rated operating voltage	U_e max.	240 V
Utilisation category		AC-15; 24 V / 10 A ; 240 V / 3 A
Protection class		II, Insulated
Mechanical data		
Ambient temperature		–25 °C to +70 °C (Connection cable installed)
Mechanical service life		10 x 10^6 switching cycles
Switching frequency		≤ 60/min.
Type of connection		Cable 4 x 0.75 mm^2
Protection class		IP67 conforming to EN 60529; DIN VDE 0470 T1
Standards		
VDE 0660 T100, DIN EN 60947-1, IEC 60947-1 VDE 0660 T200, DIN EN 60947-5-1, IEC 60947-5-1		

I49

	IW	RIW
	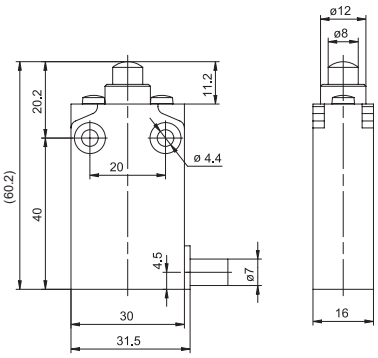	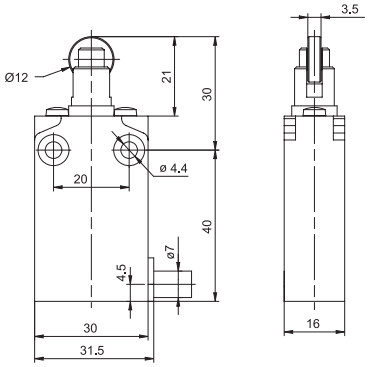

Switching operation	Slow-action	Snap-action	Slow-action	Snap-action
1 NC / 1 NO contact	**6089102049** I49-U1Z IW 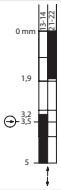	**6089152048** I49-SU1Z IW 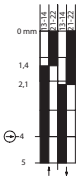	**6089117053** I49-U1Z RIW 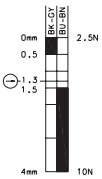	**6089167052** I49-SU1Z RIW 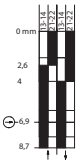
2 NC contacts				
2 NO contacts				
1 NC / 1 NO contact Overlapping				
Approvals				

AH

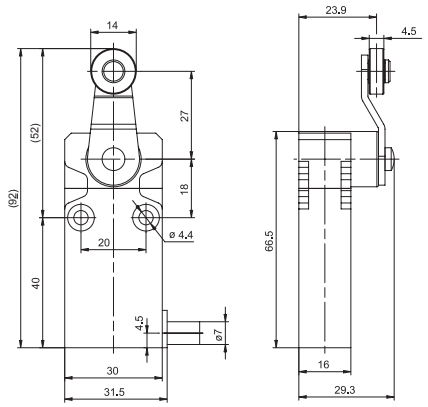

Slow-action	Snap-action
6089135057 I49-U1Z AH	**6089185056** I49-SU1Z AH

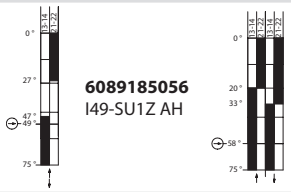

IWF

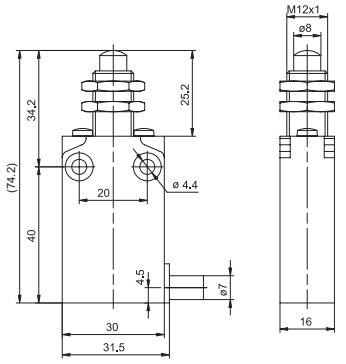

Slow-action	Snap-action
6089102051 I49-U1Z IWF	**6089152050** I49-SU1Z IWF

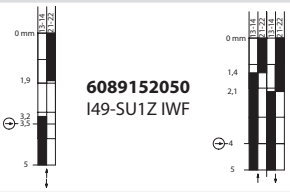

RIWF

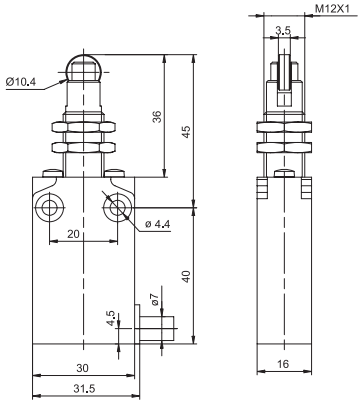

Slow-action	Snap-action
6089117055 I49-U1Z RIWF	**6089167054** I49-SU1Z RIWF

Special features / variants

- Front mounting

Special features / variants

- Front mounting

I49

	IW	RIW
	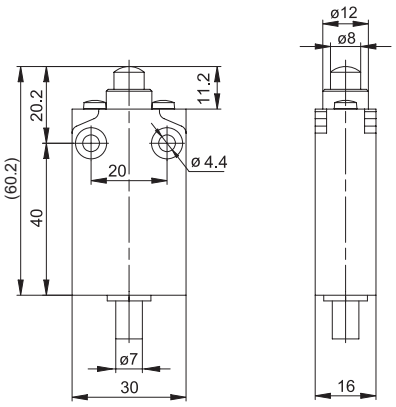	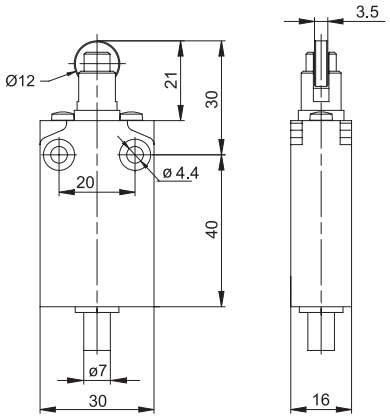

Switching operation	IW Slow-action	IW Snap-action	RIW Slow-action	RIW Snap-action
1 NC / 1 NO contact	**6089102059** I49-U1Z IW Z 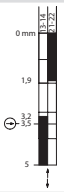	**6089152058** I49-SU1Z IW Z 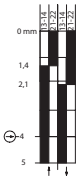	**6089117061** I49-U1Z RIW Z	**6089167060** I49-SU1Z RIW Z 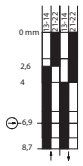
2 NC contacts	**6089802070** I49-A2Z IW Z		**6089817071** I49-A2Z RIW Z 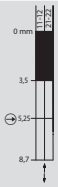	
2 NO contacts				
2 NC / 2 NO contacts	**6089202075** I49-U2Z IW Z 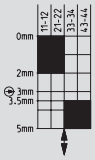		**6089217076** I49-U2Z RIW Z 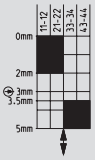	
Approvals				

Special features / variants

- Vertical cable outlet

Special features / variants

- Vertical cable outlet

AH

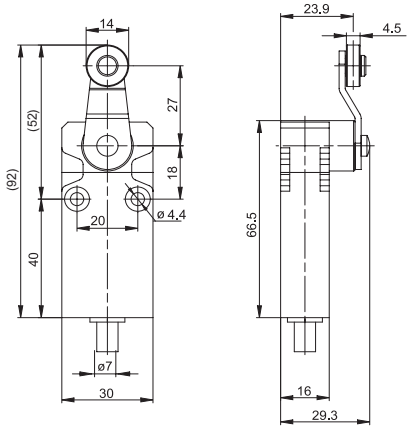

Slow-action	Snap-action
6089135067 I49-U1Z AH Z	**6089185066** I49-SU1Z AH Z
6089835073 I49-A2Z AH Z	
6089235078 I49-U2Z AH Z	

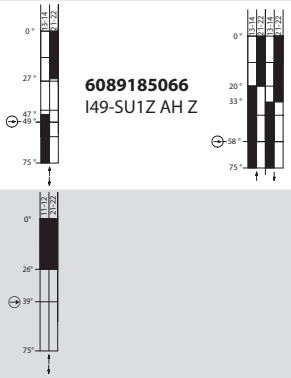

Special features / variants

- Vertical cable outlet

IWF

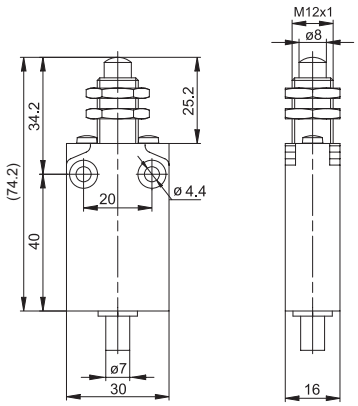

Slow-action	Snap-action
6089102063 I49-U1Z IWF Z	**6089152062** I49-SU1Z IWF Z
6089852069 I49-A2Z IWF Z	
6089452074 I49-U2Z IWF Z	

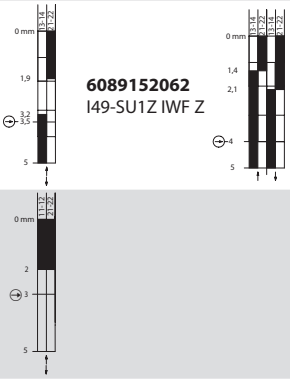

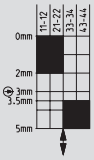

Special features / variants

- Vertical cable outlet
- Front mounting

RIWF

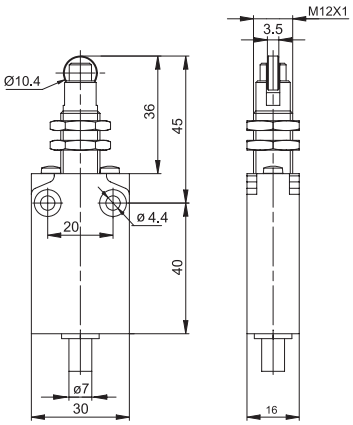

Slow-action	Snap-action
6089117065 I49-U1Z RIWF Z	**6089167064** I49-SU1Z RIWF Z
6089817072 I49-A2Z RIWF Z	
6089217077 I49-U2Z RIWF Z	

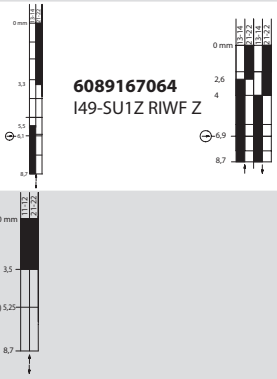

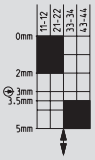

Special features / variants

- Vertical cable outlet
- Front mounting

Notes

Double Insulated Position Switches

BERNSTEIN

IN62, IN65 and I81

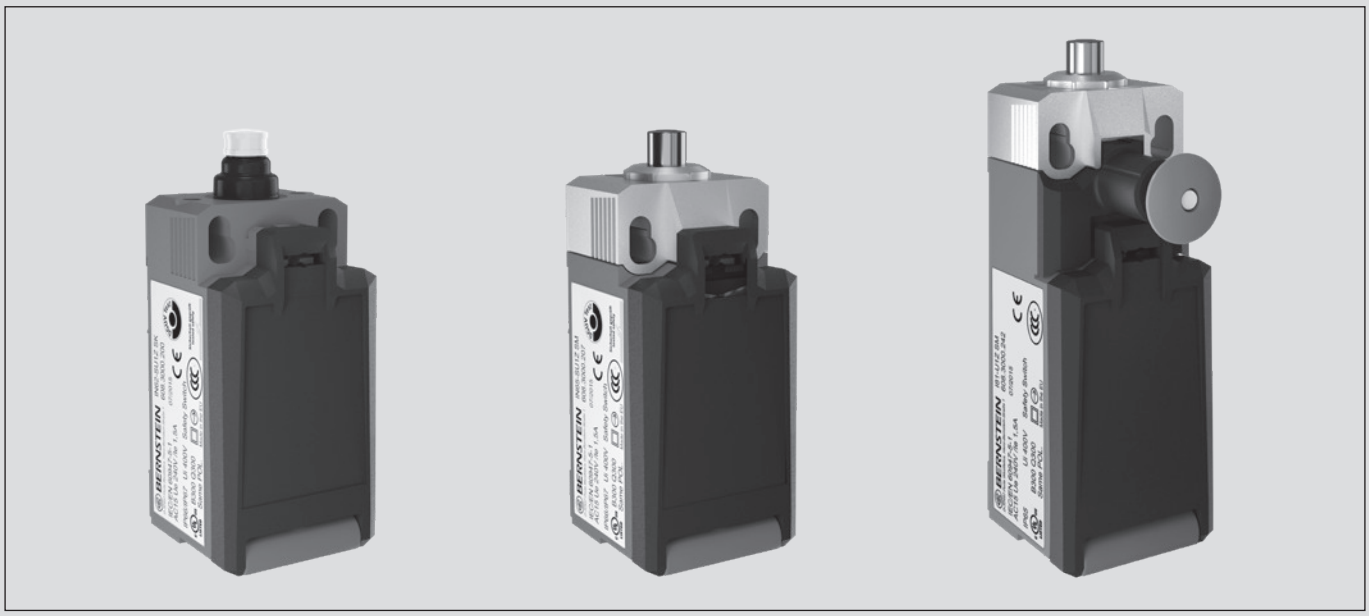

Recommended use

Thanks to its standard dimensions as well as its wide range of contacts and actuators, these switches can be used on safety facilities and for position monitoring in virtually any industrial application.

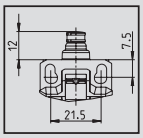

Fig. 1

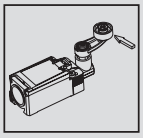
Fig. 2

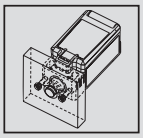
Fig. 3

Product advantages

- Standard switch conforming to DIN EN 50047
- Standard actuator conforming to DIN EN 50047 (see page 16)
- Protection class IP66 and IP67 to VDE 0470 T1
- Enclosure and cover self-extinguishing (UL-94-V0)
- Actuator can be repositioned by 8 x 45°
- Tool-free rotation and changing of actuator
- Connection designation conforming to DIN EN 50013
- Metal Actuator
- Metal fixing plate
- High reliability at low currents (1 mA)

Options

- Available with M12 connector
- Cable entry M16 x 1.5

Design layout

- Slow-action and snap-action contacts
- Versions: 1 NC / 1 NO, 2 NC, 2 NO, overlapping contacts
- All NC contacts with ⊖ in the circuit diagram are positively opening contacts
- Type: Zb (galvanically isolated changeover contact)

Mounting

- Two M4 screws (distance between centres 22 mm), adjustment with slots
- Two M5 screws for safety applications without additional fixing element (Fig. 1)
- Additionally secured by guide plate for lateral approach forces (Fig. 2 and page 71)
- Front mounting (depending on type, Fig. 3)

Installation advantages

- Snap-on cover can be released with screwdriver
- Cover opening range 135° (cover can also be detached from hinge)
- Cover protects switching element during installation
- Screw connections with self-lifting clamping plates
- Easy-action cover lock (close and press)

Technical data

Electrical data		
Rated insulation voltage	U_i max.	400 V AC
Conventional thermal current (up to)	I_{the}	5 A
Rated operating voltage	U_e max.	240 V AC / 24 V DC
Utilisation category (up to)		AC-15, U_e/I_e 240 V / 1.5 A DC-13 U_e/I_e 24 V / 1.5 A (B300 Table A.1)
Short-circuit protection (up to)		Fuse 4 A gG
Protection class		II, Insulated
Mechanical data		
Enclosure material		Thermoplastic, glass fibre-reinforced (UL 94-V0)
Ambient temperature		–30 °C to +75 °C
Mechanical service life (up to)		30 x 10^6 switching cycles
B10d (NC contact) cycles (up to) B10d (NO contact) cycles (up to)		30 Mio. 1 Mio.
Switching frequency		≤ 60/min.
Type of connection		4 Screw connections (M3)
Conductor cross sections		Single-wire 0.5 – 1.5 mm^2 or Stranded wire with ferrule 0.5 – 1.5 mm^2
Cable entry		1 x M20 x 1.5
Standards		
VDE 0660 T211, DIN EN 60947-5-4, IEC 60947-5-4 DIN EN ISO 13849-1, DIN EN ISO 13849-2		

IN62, IN65

	IN62 (Form B)	IN65-... SM (Form B)
	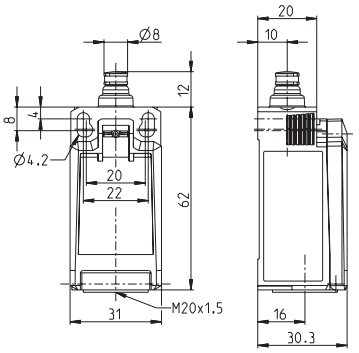	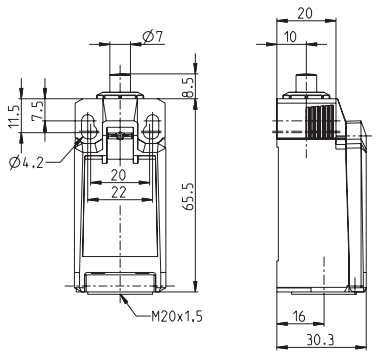

Switching operation	Slow-action	Snap-action	Slow-action	Snap-action
1 NC / 1 NO contact	**6083000201** IN62-U1Z SK 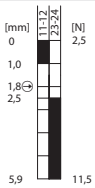	**6083000200** IN62-SU1Z SK 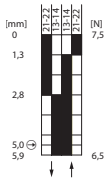	**6083000208** IN65-U1Z SM 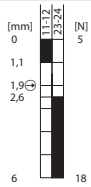	**6083000207** IN65-SU1Z SM 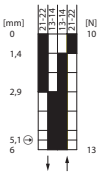
2 NC contacts	**6083000203** IN62-A2Z SK 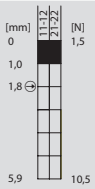	**6083000202** IN62-SA2Z SK 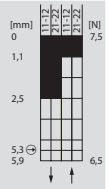	**6083000210** IN65-A2Z SM 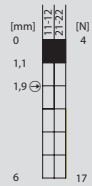	**6083000209** IN65-SA2Z SM 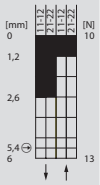
2 NO contacts	**6083000205** IN62-E2 SK 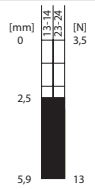	**6083000204** IN62-SE2 SK 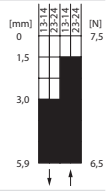	**6083000212** IN65-E2 SM 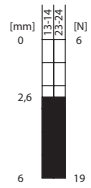	**6083000211** IN65-SE2 SM 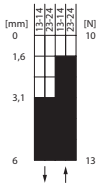
1 NC / 1 NO contact Overlapping	**6083000206** IN62-UV1Z SK 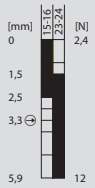		**6083000213** IN65-UV1Z SM 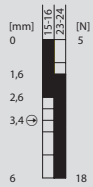	
Approvals				

Replacement actuator: 3918052341

IN65-... RK (Form C)

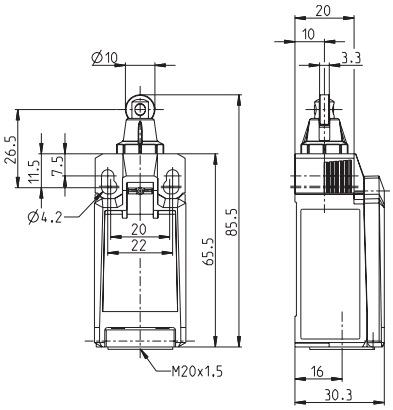

Slow-action | **Snap-action**

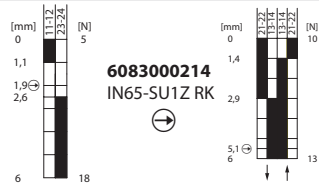

6083000215
IN65-U1Z RK

6083000214
IN65-SU1Z RK

6083000217
IN65-A2Z RK

6083000216
IN65-SA2Z RK

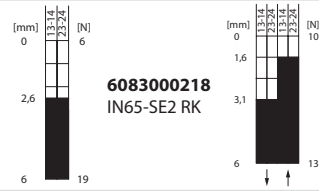

6083000219
IN65-E2 RK

6083000218
IN65-SE2 RK

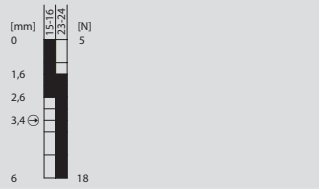

6083000220
IN65-UV1Z RK

IN65-... KNK

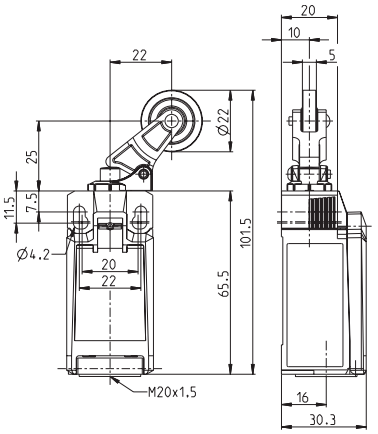

Slow-action | **Snap-action**

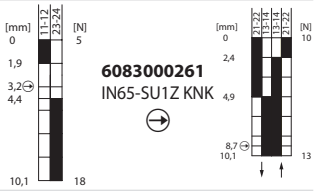

6083000262
IN65-U1Z KNK

6083000261
IN65-SU1Z KNK

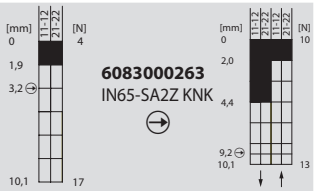

6083000264
IN65-A2Z KNK

6083000263
IN65-SA2Z KNK

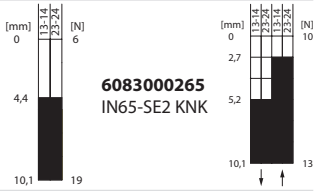

6083000266
IN65-E2 KNK

6083000265
IN65-SE2 KNK

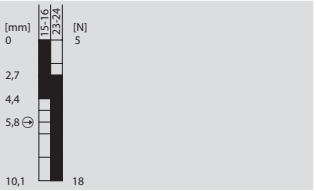

6083000267
IN65-UV1Z KNK

IN65-... HK (Form E)

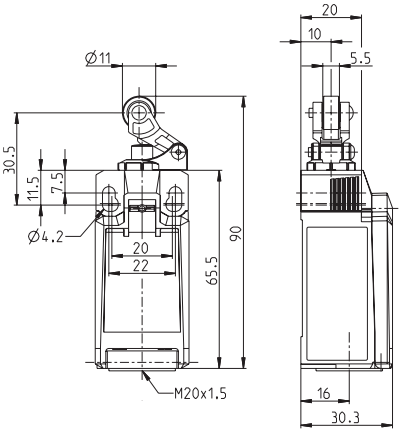

Slow-action | **Snap-action**

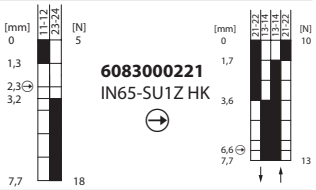

6083000222
IN65-U1Z HK

6083000221
IN65-SU1Z HK

6083000224
IN65-A2Z HK

6083000223
IN65-SA2Z HK

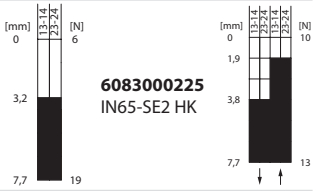

6083000226
IN65-E2 HK

6083000225
IN65-SE2 HK

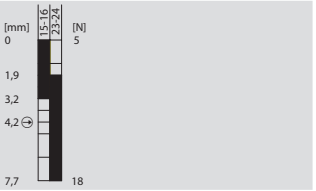

6083000227
IN65-UV1Z HK

Replacement actuator: 3918172342

Replacement actuator: 3918262349

Replacement actuator: 3918202343

IN65

	IN65-... AHK (Form A)		IN65-... AVK	
	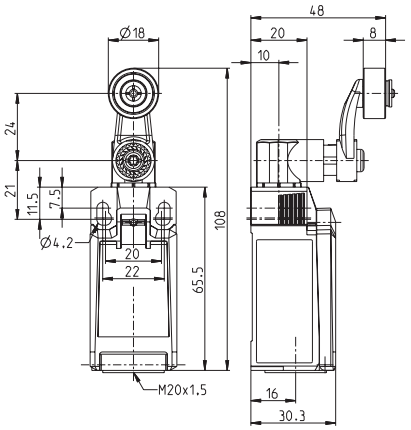		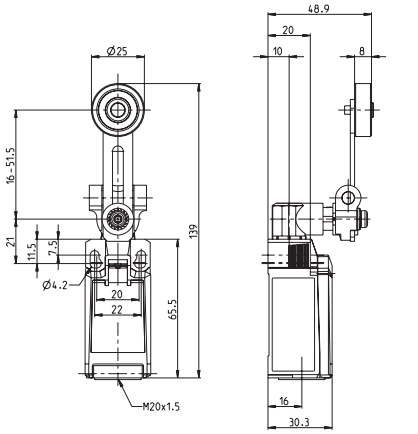	
Switching operation	**Slow-action**	**Snap-action**	**Slow-action**	**Snap-action**
1 NC / 1 NO contact	**6083000236** IN65-U1Z AHK	**6083000235** IN65-SU1Z AHK	**6083000284** IN65-U1 AVK	**6083000280** IN65-SU1 AVK
2 NC contacts	**6083000238** IN65-A2Z AHK	**6083000237** IN65-SA2Z AHK	**6083000279** IN65-A2 AVK	**6083000286** IN65-SA2 AVK
2 NO contacts	**6083000240** IN65-E2 AHK	**6083000239** IN65-SE2 AHK	**6083000287** IN65-E2 AVK	**6083000288** IN65-SE2 AVK
1 NC / 1 NO contact Overlapping	**6083000241** IN65-UV1Z AHK		**6083000285** IN65-UV1 AVK	
Approvals				

Replacement actuator: 3918352345

IN65-... DGHK

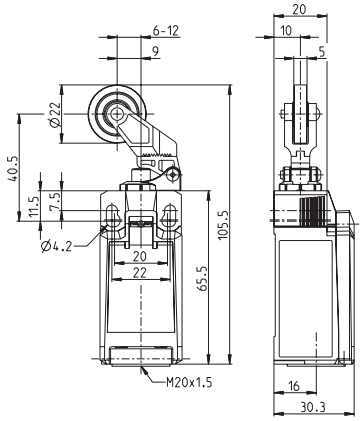

Slow-action

6083000229
IN65-U1Z DGHK

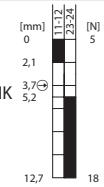

6083000231
IN65-A2Z DGHK

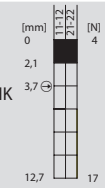

6083000233
IN65-E2 DGHK

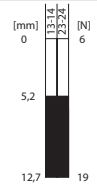

6083000234
IN65-UV1Z DGHK

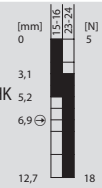

Snap-action

6083000228
IN65-SU1Z DGHK

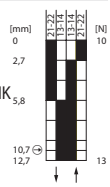

6083000230
IN65-SA2Z DGHK

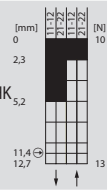

6083000232
IN65-SE2 DGHK

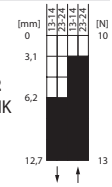

IN65-... DGKK

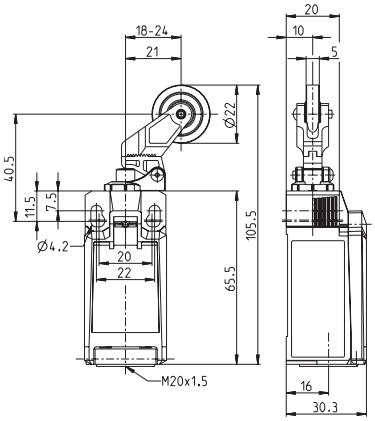

Slow-action

6083000255
IN65-U1Z DGKK

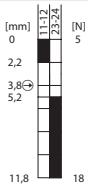

6083000257
IN65-A2Z DGKK

6083000259
IN65-E2 DGKK

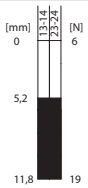

6083000260
IN65-UV1Z DGKK

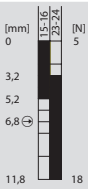

Snap-action

6083000254
IN65-SU1Z DGKK

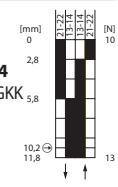

6083000256
IN65-SA2Z DGKK

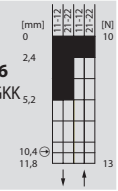

6083000258
IN65-SE2 DGKK

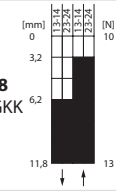

IN65-... AHSGU RO50

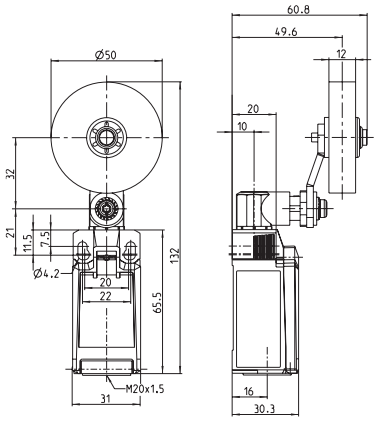

Slow-action

6083000296
IN65-U1Z
AHSGU RO50

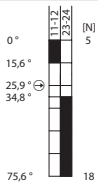

6083000297
IN65-A2Z
AHSGU RO50

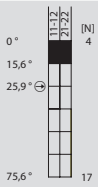

6083000298
IN65-E2
AHSGU RO50

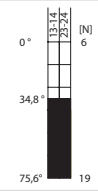

6083000299
IN65-UV1Z
AHSGU RO50

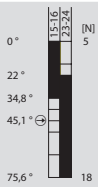

Snap-action

6083000300
IN65-SU1Z
AHSGU RO50

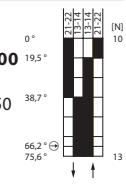

6083000301
IN65-SA2Z
AHSGU RO50

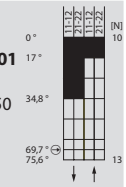

6083000302
IN65-SE2
AHSGU RO50

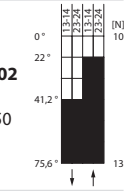

Replacement actuator: 3918202344

Replacement actuator: 3918202348

Replacement actuator: 3918352359

IN65

IN65-... AHDM

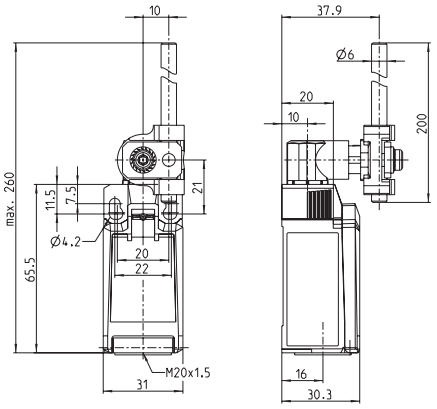

Switching operation	Slow-action	Snap-action
1 NC / 1 NO contact	**6083000303** IN65-U1 AHDM 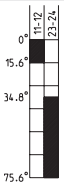	**6083000307** IN65-SU1 AHDM 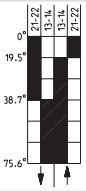
2 NC contacts	**6083000304** IN65-A2 AHDM	**6083000308** IN65-SA2 AHDM 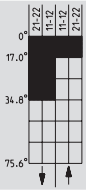
2 NO contacts	**6083000305** IN65-E2 AHDM 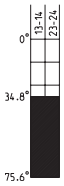	**6083000309** IN65-SE2 AHDM 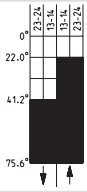
1 NC / 1 NO contact **Overlapping**	**6083000306** IN65-UV1 AHDM	
Approvals		

I81 Actuator		1 NC / 1 NO contact – Slow-action		
I81-... SM	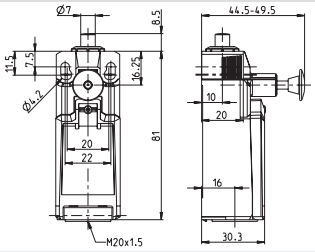	**6083000242** I81-U1Z SM	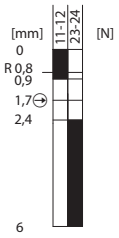	**Replacement actuator: 3918052341**
I81-... RK	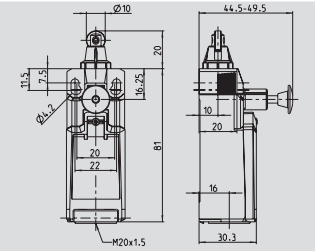	**6083000243** I81-U1Z RK	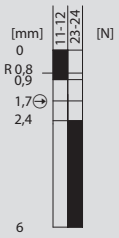	**Replacement actuator: 3918172342**
I81-... KNK	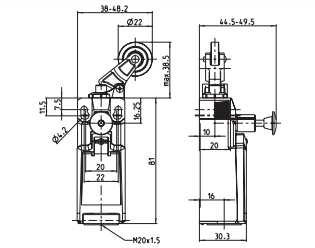	**6083000269** I81-U1Z KNK	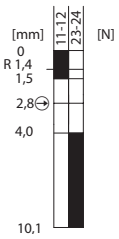	**Replacement actuator: 3918262349**
I81-... HK	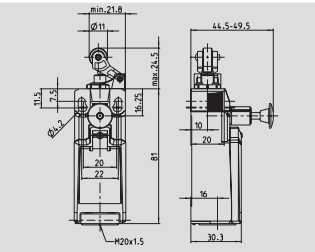	**6083000244** I81-U1Z HK	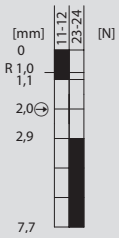	**Replacement actuator: 3918202343**
I81-... AHK	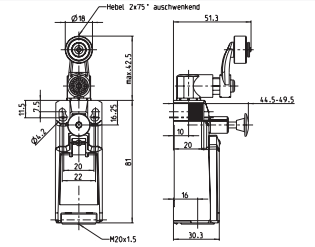	**6083000246** I81-U1Z AHK	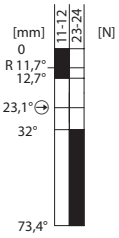	**Replacement actuator: 3918352345**
I81-... DGHK	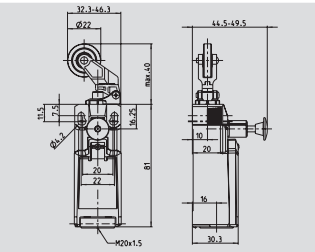	**6083000245** I81-U1Z DGHK	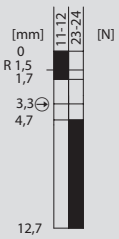	**Replacement actuator: 3918202344**
I81-... DGKK	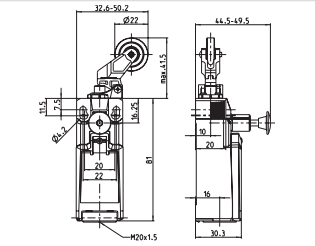	**6083000268** I81-U1Z DGKK	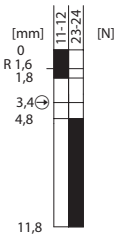	**Replacement actuator: 3918202348**

Approvals

R = Locking function

Notes

Bistable Safety Switch with Remote Release

BERNSTEIN

SGS

The SGS is a bistable safety switch with remote release facility. Once switched, the SGS remains in this position until it is manually reset at the plunger or via an external button. A built-in solenoid actuator controls the release action.

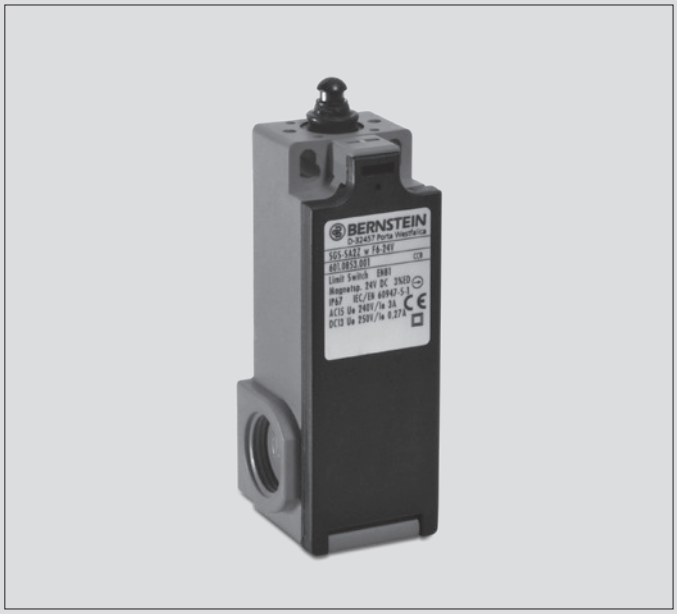

The SGS can be used wherever an intentional (manual or electrical) reset function is required:

- In lift construction
- In door and gate systems
- In wind power stations
- Wherever safety is of prime importance

By correspondingly checking the NC contacts with positive opening action, an evaluator circuit is able to disconnect the power supply to a drive controller and shut down the machine.

SGS applications include

- Lift pre-switching (speed limiter)
- Monitoring of emergency release function
- Machine construction applications where specific reset after operation is required
- Use in areas difficult to access
- Remote monitoring and reset over large distances

Features:

- Plunger indicates switch status
- Plunger groove for manual reset
- 2 versions: 230 V AC and 24 V DC
- Reset via built-in solenoid actuator
- 3 cable outlets M20 x 1.5
- Switching functions: 2 NC contacts
- TÜV EN 81 approval
- Other actuators from the standard range on request

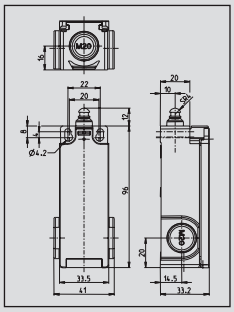

Product selection

Supply voltage reset 24 Volt				
Switching operation	**Actuating force 3 N**		**Actuating force 6 N**	
1NC / 1NO	–	–	–	–
2NC	6010853002	SGS-SA2Z W F3 24 V	6010853001	SGS-SA2Z W F6 24 V

Supply voltage reset 230 Volt				
Switching operation	**Actuating force 3 N**		**Actuating force 6 N**	
1NC / 1NO	–	–	6010153027	SGS-SU1Z W F6 230 V
2NC	6010853004	SGS-SA2Z W F3 230 V	6010853003	SGS-SA2Z W F6 230 V

Technical data

Electrical data		
Protection class		II, Insulated
Switching elements		
Rated insulation voltage	U_i	250 V AC
Thermal current	I_{the}	10 A
Utilisation category		AC-15, U_e /I_e 240 V / 3 A DC-13, U_e /I_e 250 V / 0.27 A
Minimum switching voltage		24 V
Minimum switching current		5 mA
Positive opening	⊖	conforming IEC/EN 60947-5-1, Addendum K
Short-circuit protection		Fuse 4 A gL/gG
Electromagnet		Without free-wheeling diode
Thermal class		B (130 °C)
Rated operating voltage	U_e	24 V DC / 230 V AC (depending on type)
Rated operating current	I_e	2.3 A / 0.23 A AC
Duty factor	ED	3 %
Minimum ON time	T_i	0.2 s
Maximum ON time	T_e	0.5 s
Minimum OFF time	T_p	17 s
Mechanical data		
Enclosure		Glass fibre-reinforced thermoplastic, self-extinguishing
Cover		Glass fibre-reinforced thermoplastic, self-extinguishing
Actuation		Plunger (thermoplastic)
Approach speed	V_{max}	0.5 $^m/_s$
Ambient temperature		–25 °C bis +50 °C
Contact type		2 NC contacts (Zb) / NC contacts, 1 NO contacts (Zb)
Switching principle		Snap action system, bistable
Mechanical service life		5 x 10^4 switching cycles
B10d		0,1 Mio.
Bolt		2 x M4 / 2 x M5 for safety applications
Type of connection Switching element		Screw connections
Conductor cross sections		Single-wire 0.5 ... 1.5 mm^2
Type of connection Electromagnet		2 x butt connector similar to DIN 46341 (crushing zone 0,5 – 1,5 mm^2)
Cable entry		3x M20x1,5
Installation position		Any
Contact opening		4 x >2 mm
Protection class		IP65 conforming to IEC/EN 60529
Standards		
VDE 0660 T100, DIN EN 60947-1, IEC 60947-1 VDE 0660 T200, DIN EN 60947-5-1, IEC 60947-5-1 DIN EN 81-1		

Insulation-Enclosed Limit Switches

Bi2

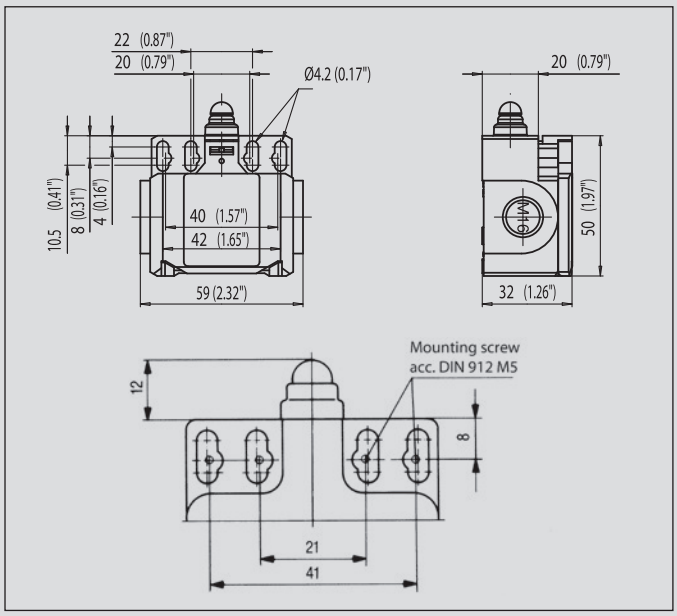

Recommended use

Thanks to its two cable entries, this switch is ideal for use in series-connected monitoring facilities.

Product advantages

- Protection class IP65 to VDE 0470 T1
- Enclosure and cover PA 6, self-extinguishing (UL-94 V0)
- Actuator can be repositioned by 4 x 90°
- Cable entry 2x M16 x 1.5
- Connection designation conforming to DIN EN 50013

Options

- Available with M12 connector
- AS interface variants available
- Preassembled with customer-specific cables and connectors on request

Design layout

- Slow-action and snap-action contacts
- Versions: 1 NC / 1NO, 2 NC
- All NC contacts with ⊖ in the circuit diagram are positively opening contacts
- Type: Zb (galvanically isolated changeover contact)

Mounting

- Two M4 adjustment slots (distance between centres 22 mm)
- Two M4 adjustment slots (distance between centres 42 mm)
- Two M5 holes (distance between centre 21 mm) for safety applications
- Two M5 holes (distance between centre 41 mm) for safety applications without additional securing element
- Front mounting

Installation advantages

- Cover opening range 135° (cover can also be detached from hinge)
- Screw connections with self-lifting clamping plates
- Easy-action cover lock (close and press)
- Cover additionally secured with screw
- 2 cable entries for through-wiring

Technical data

Electrical data		
Rated insulation voltage	U_i max.	400 V AC
Conventional thermal current ①	I_{the}	10 A
Rated operating voltage	U_e max.	240 V AC
Utilisation category		AC15, U_e/I_e 240 V/3 A
Short-circuit protection (up to) ①		Fuse 10 A gL/gG
Protection class		II, Insulated
Mechanical data		
Enclosure material	Thermoplastic, glass fibre-reinforced	
Ambient temperature	–30 °C to +80 °C	
Mechanical service life (up to) ①	10 x 10^6 switching cycles	
B10d (up to) ①	20 Mio.	
Switching frequency	≤ 100/min.	
Type of connection	Screw connections	
Conductor cross sections	Single-wire 0.5 – 1.5 mm^2 or Stranded wire with ferrule 0.5 – 1.5 mm^2	
Cable entry	2 x M16 x 1,5	
Protection class	IP65 conforming to EN 60529; DIN VDE 0470 T1	
Standards		
VDE 0660 T100, DIN EN 60947-1, IEC 60947-1 VDE 0660 T200, DIN EN 60947-5-1, IEC 60947-5-1		

① Depending on switching system. See Table on Pages 72 – 75.

	W	RIW

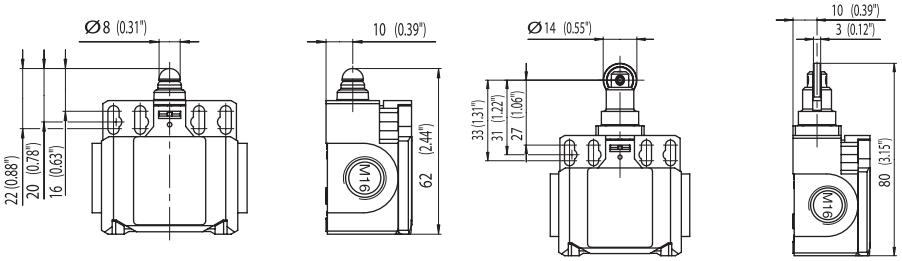

Switching operation	Slow-action	Snap-action	Slow-action	Snap-action
1 NC / 1 NO contact	**6085103100** BI2-U1Z W	**6085153107** BI2-SU1Z W	**6085117101** BI2-U1Z RIW	**6085167108** BI2-SU1Z RIW
2 NC contacts	**6085803116** BI2-A2Z W			
2 NO contacts				
1 NC / 1 NO contact Overlapping	**6085303115** BI2-UV1Z W			
Approvals				

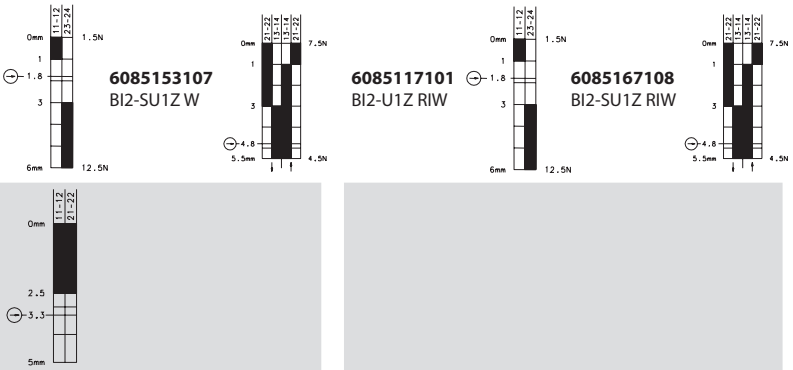

Replacement actuator: –

Replacement actuator: –

Special features / variants
(on request)

Special features / variants
(on request)

- With steel roller

Bi2

	AH		AV	
	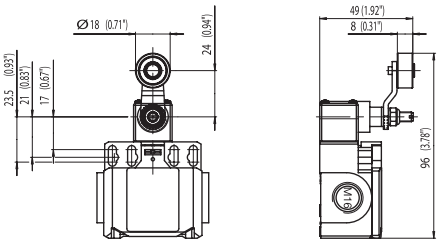		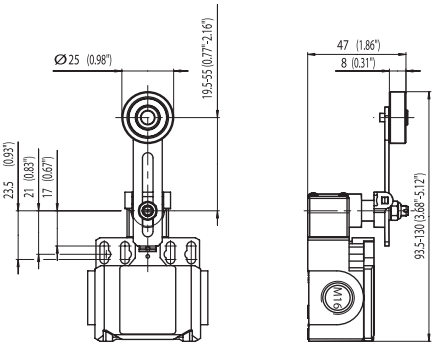	
Switching operation	**Slow-action**	**Snap-action**	**Slow-action**	**Snap-action**
1 NC / 1 NO contact	**6085135104** BI2-U1Z AH 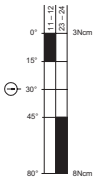	**6085185111** BI2-SU1Z AH 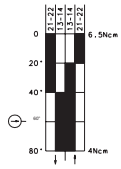		**6085186112** BI2-SU1 AV 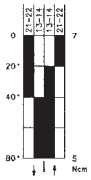
2 NC contacts				
2 NO contacts				
1 NC / 1 NO contact Overlapping				
Approvals				
	Replacement actuator: 3918351166		**Replacement actuator: 3918360984**	
	Special features / variants (on request) ● Available with different actuating directions ● With steel roller ● Various roller diameters ● Cranked or straight lever ● Various lever lengths		**Special features / variants** (on request)	

HW RO13.5

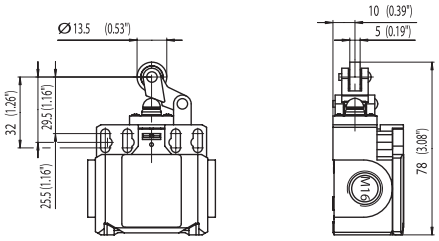

Slow-action	Snap-action
	6085171109 BI2-SU1Z HW RO13.5

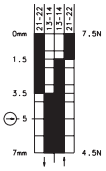

Replacement actuator: 3918190681

Special features / variants
(on request)

FF

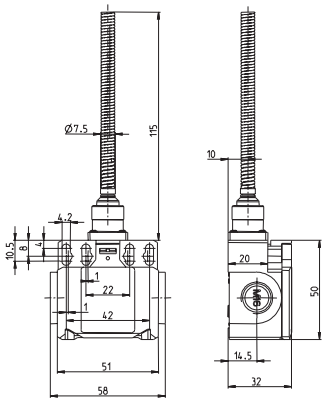

Slow-action	Snap-action
6185140104 BI2-U1 FF	**6085190114** BI2-SU1 FF

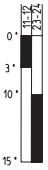

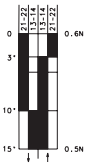

Replacement actuator: 3918401031

Special features / variants
(on request)

- Available with different spring lengths
- Spring rod
- Various spring versions

AD

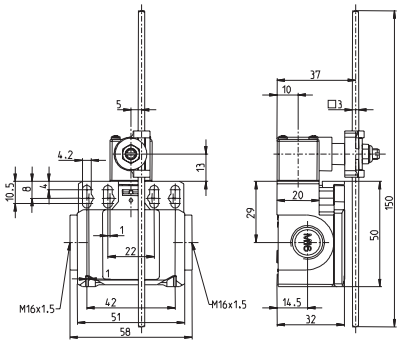

Slow-action	Snap-action
	6085187113 BI2-SU1 AD

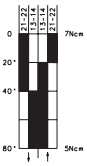

Replacement actuator: 3918370986

Special features / variants
(on request)

Insulation-Enclosed Limit Switches

ENK

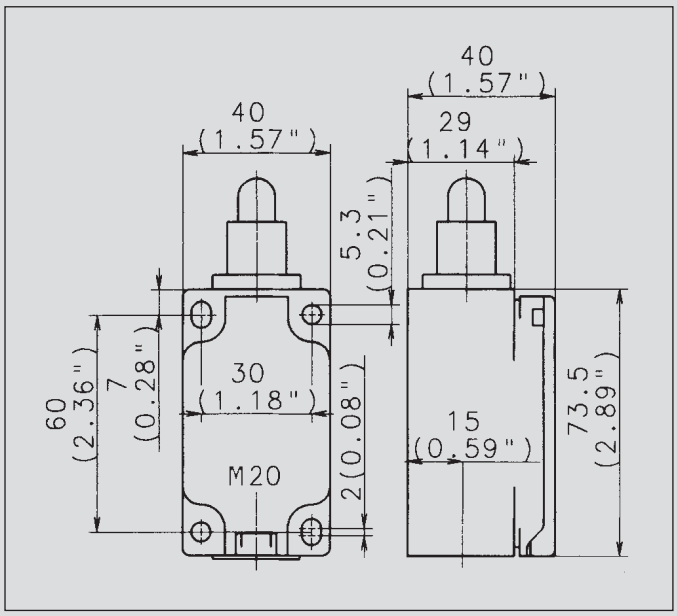

Recommended use

Thanks to its design and its metal actuator, the ENK limit switch is particularly suitable for applications requiring a sturdy safety switch made of plastic.

Product advantages

- Standard switch conforming to DIN EN 50041
- Standard actuator conforming to DIN EN 50041 (see page 15)
- Protection class IP65 to VDE 0470 T1
- Enclosure and cover PA 6, (UL-94-V0)
- Actuator can be repositioned by 4 x 90°
- Cable entry M20 x 1.5
- Connection designation conforming to DIN EN 50013
- Metal actuators for high loads

Options

- Available with M12 connector
- AS interface variants available
- Preassembled with customer-specific cables and connectors on request

Design layout

- Slow-action and snap-action contacts
- Versions: 1 NC / 1NO, 2 NC, 3 NC, overlapping contacts
- Latching function on request
- All NC contacts with ⊖ in the circuit diagram are positively opening contacts
- Type: Zb (galvanically isolated changeover contact)

Mounting

- 2 adjustment slots for M5 screws
- 2 holes for M5 mounting screws in safety applications

Installation advantages

- Snap-on cover can be released with screwdriver
- Cover opening range 150° (cover can also be detached from hinge)
- Cover protects switching element during installation
- Screw connections with self-lifting clamping plates
- Easy-action cover lock (close and press

Technical data

Electrical data		
Rated insulation voltage	U_i max.	400 V AC
Conventional thermal current (up to) ①	I_{the}	10 A
Rated operating voltage	U_e max.	240 V
Utilisation category		AC-15, U_e/I_e 240 V/3 A
Short-circuit protection (up to) ①		Fuse 10 A gL/gG
Protection class		II, Insulated
Mechanical data		
Enclosure material	Thermoplastic, glass fibre-reinforced	
Ambient temperature	–30 °C to +80 °C	
Mechanical service life (up to) ①	10 x 10^6 switching cycles	
B10d (up to) ①	20 Mio.	
Switching frequency	≤ 100/min.	
Type of connection	Screw connections	
Conductor cross sections	Single-wire 0.5 – 1.5 mm^2 or Stranded wire with ferrule 0.5 – 1.5 mm^2	
Cable entry	1 x M20 x 1.5 ≈ 0.15 kg	
Protection class	IP65 onforming to EN 60529; DIN VDE 0470 T1	
Standards		
VDE 0660 T100, DIN EN 60947-1, IEC 60947-1 VDE 0660 T200, DIN EN 60947-5-1, IEC 60947-5-1		

① Depending on switching system. See Table on Pages 72 – 75.

	IW (Form B)	RIW (Form C)
	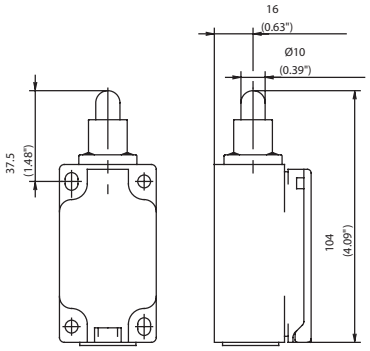	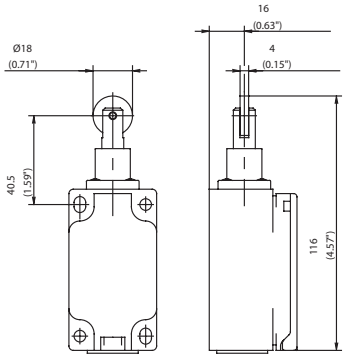
Switching operation	**Slow-action** / **Snap-action**	**Slow-action** / **Snap-action**
1 NC / 1 NO contact	**6081102001** ENK-U1Z IW 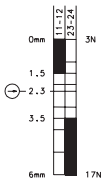 **6081152007** ENK-SU1Z IW 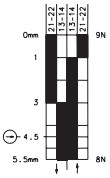	**6081117002** ENK-U1Z RIW 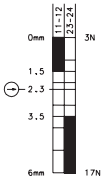 **6081167008** ENK-SU1Z RIW 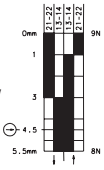
2 NC contacts		**6081817281** ENK-A2Z RIW 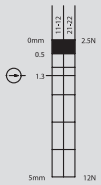
2 NO contacts		
1 NC / 1 NO contact Overlapping		**6081317307** ENK-UV1Z RIW 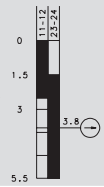
Approvals		
	Replacement actuator: 3918020660	**Replacement actuator: 3918170661**
	Special features / variants (on request) ● Available with black enclosure and following contacts: 3 NC contacts	**Special features / variants** (on request) ● Available for high temperature range and following contacts: 3 NC contacts

ENK

	AHS-V (Form A)		AV	
	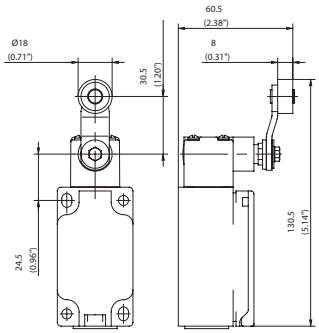		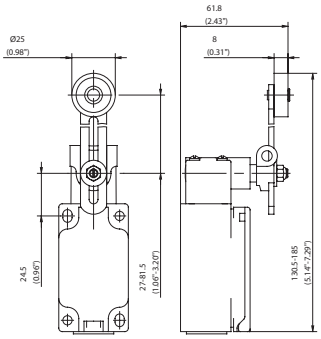	
Switching operation	**Slow-action**	**Snap-action**	**Slow-action**	**Snap-action**
1 NC / 1 NO contact	**6081135003** ENK-U1Z AHS-V 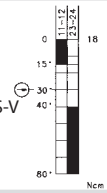	**6081185009** ENK-SU1Z AHS-V 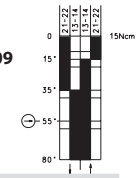	**6081136012** ENK-U1 AV 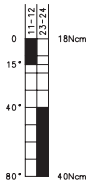	**6081186018** ENK-SU1 AV 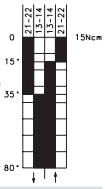
2 NC contacts	**6081835323** ENK-A2Z AHS-V 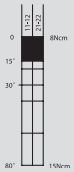			
2 NO contacts				
1 NC / 1 NO contact **Overlapping**	**6081335006** ENK-UV1Z AHS-V 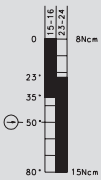			
Approvals				

Replacement actuator: 3918350737

Special features / variants
(on request)

- Available with black enclosure
- With 50 mm diameter rubber roller and following contacts: 3 NC contacts

Replacement actuator: 3918360738

Special features / variants
(on request)

- Available with different lever lengths and roller diameters
- With 50 mm diameter rubber roller
- With roller over switch

AD (Form D)

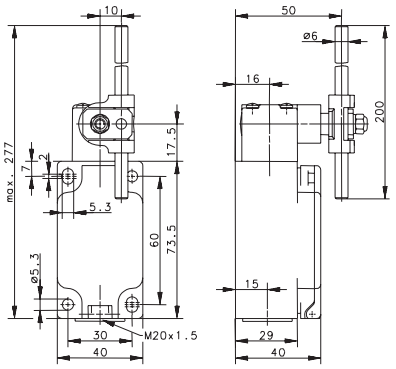

Slow-action	Snap-action
6081137011 ENK-U1 AD	**6081187017** ENK-SU1 AD

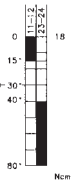

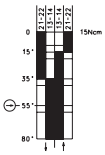

Replacement actuator: 3918370739

Special features / variants
(on request)

- Available with various actuator directions and actuator lengths

HW RO20

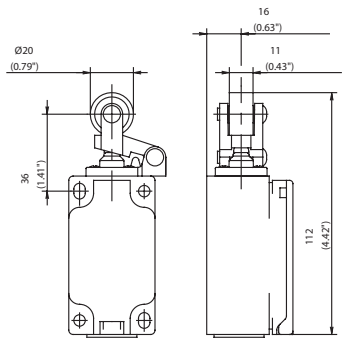

Slow-action	Snap-action
6081121095 ENK-U1Z HW RO20	**6081171096** ENK-SU1Z HW RO20

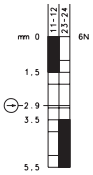

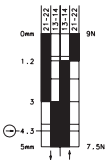

Replacement actuator: 3918200906

Special features / variants
(on request)

- Available with black enclosure and various roller diameters

FF

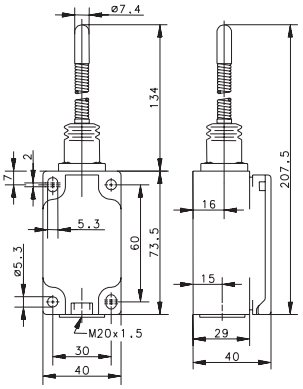

Slow-action	Snap-action
	6081190045 ENK-SU1 FF

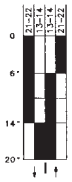

Replacement actuator: 3918400662

Special features / variants
(on request)

Metal-Enclosed Limit Switches

GC

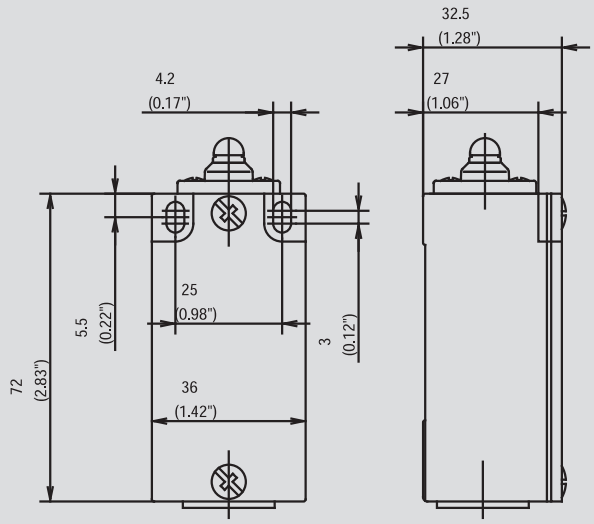

Recommended use

Thanks to its compact design, this metal-enclosed switch is ideally suited for virtually all safety and position monitoring applications.

Product advantages

- Protection class IP65 to VDE 0470 T1
- Enclosure: Aluminium pressure die-casting
- Cover: Sheet aluminium
- Actuator can be repositioned by 4 x 90°
- Cable entry M20 x 1.5
- Connection designation conforming to DIN EN 50013
- Metal actuators for high loads
- Graduated adjustment of AH lever
- Selectable direction-dependent contact-making of AH actuator (basic setting: contact-making both sides)

Options

- AS interface versions on request
- Preassembled with customer-specific cables and connectors on request

Design layout

- Slow-action and snap-action contacts
- Versions: 1 NC / 1NO, 2 NC / 2 NO, 2 NC, overlapping contacts
- All NC contacts with ⊖ in the circuit diagram are positively opening contacts
- Type: Zb (galvanically isolated changeover contact)
- Latching function on request

Mounting

- 2 adjustment slots for M4 screws (for safety applications with blind hole for ø 4.0 mm fitted pin in enclosure base or enclosure with holes for M5)

Installation advantages

- Screw connections with self-lifting clamping plates
- Captive cover screws
- Easy-to-change switching system thanks to snap-in retainer
- Finely adjustable switching point with adjusting screw

Technical data

Electrical data		
Rated insulation voltage (up to) ①	U_i max.	400 V AC
Conventional thermal current (up to) ①	I_{the}	10 A
Rated operating voltage	U_e max.	240 V
Utilization category (up to) ①		AC-15, U_e/I_e 240 V/3 A
Short-circuit protection (up to) ①		Fuse 10 A gL/gG
Protection class		I
Mechanical data		
Enclosure material	Aluminium pressure die-casting	
Ambient temperature	–30 °C to + 80 °C	
Mechanical service life (up to) ①	10 x 10^6 switching cycles	
B10d (up to) ①	20 Mill.	
Switching frequency	≤ 100/min.	
Type of connection	Screw connections	
Conductor cross sections	Single-wire 0.5 – 1.5 mm^2 or Stranded wire with ferrule 0.5 – 1.5 mm^2	
Cable entry	1 x M20 x 1.5	
Protection class	IP65 conforming to IEC/EN 60529	
Standards		
VDE 0660 T100, DIN EN 60947-1, IEC 60947-1 VDE 0660 T200, DIN EN 60947-5-1, IEC 60947-5-1		

① Depending on switching system. See Table on Pages 72 – 75.

	IW	STIW
	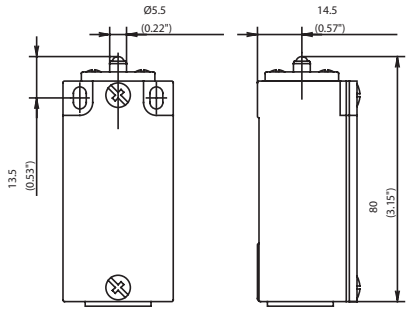	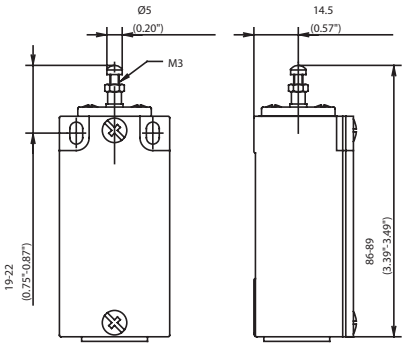
Switching operation	**Slow-action** / **Snap-action**	**Slow-action** / **Snap-action**
1 NC / 1 NO contact	**6021102001** GC-U1Z IW 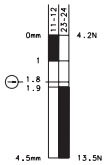 **6021352620** GC-SU1Z IW 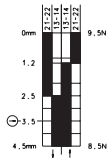	**6021105015** GC-U1Z STIW 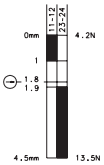 **6021155017** GC-SU1Z STIW 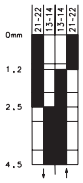
2 NC contacts	**6021802189** GC-A2Z IW 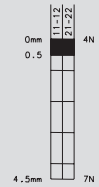	
2 NO contacts		
1 NC / 1 NO contact Overlapping		**6021305016** GC-UV1Z STIW
Approvals		
	Replacement actuator: 3912030546	**Replacement actuator: 3912050523**
	Special features / variants (on request)	**Special features / variants** ● Actuator length adjustable with adjusting screw

GC

	RIW	AH
	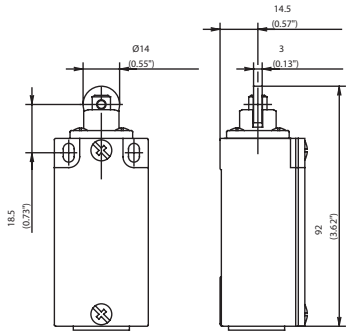	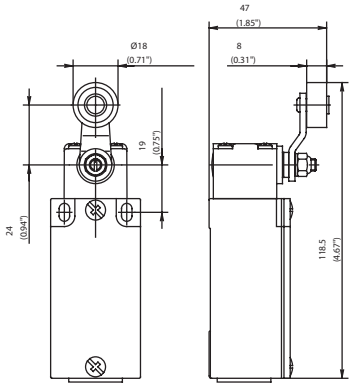

Switching operation	Slow-action	Snap-action	Slow-action	Snap-action
1 NC / 1 NO contact	**6021117029** GC-U1Z RIW 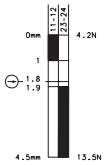	**6021367626** GC-SU1Z RIW 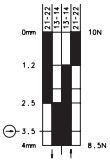	**6021135102** GC-U1Z AH 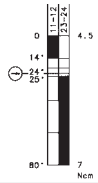	**6021385634** GC-SU1Z AH 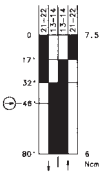
2 NC contacts	**6021817172** GC-A2Z RIW 		**6121835833** GC-A2Z AHS See separate datasheet 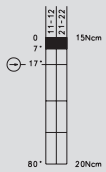	
2 NO contacts			**6021835160** GC-E2 AH 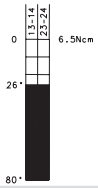	
1 NC / 1 NO contact Overlapping	**6021317030** GC-UV1Z RIW 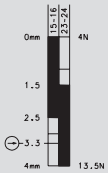		**6021335133** GC-UV1Z AH 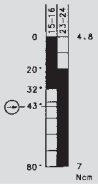	
Approvals	UL, CSA		UL, CSA	

Replacement actuator: 3912170518

Replacement actuator: 3912350722

Special features / variants
(on request)

- Available for high temperature range and following contacts:
  2 NC / 1 NO contact
  2 NC / 2 NO contact
  (larger enclosure)

Special features / variants
(on request)

- Available with various roller diameters, cranked or straight lever and with various lever lengths
- With roller over switch and with following contacts:
  2 NC / 2 NO contact
  (larger enclosure)

AV

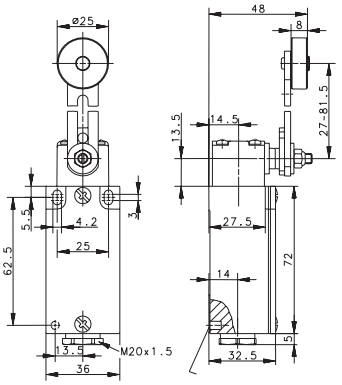

Slow-action	Snap-action
6021136104 GC-U1 AV 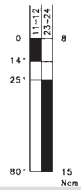	**6021186118** GC-SU1 AV 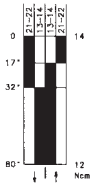

Replacement actuator: 3912360723

Special features / variants
(on request)

- Various roller diameters
- Different lever lengths
- With roller over switch and with following contacts:
  2 NC / 2 NO contact

AD

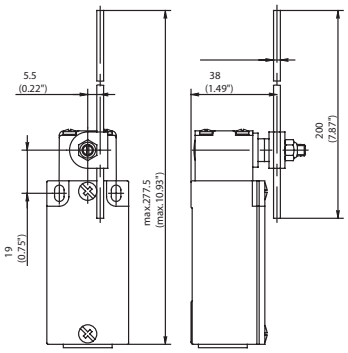

Slow-action	Snap-action
6021137103 GC-U1 AD 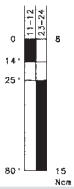	**6021187125** GC-SU1 AD

Replacement actuator: 3912370724

Special features / variants
(on request)

- Available with various actuator lengths and actuator directions
- With following contacts:
  2 NC / 1 NO with overlap
  (larger enclosure)

HIW

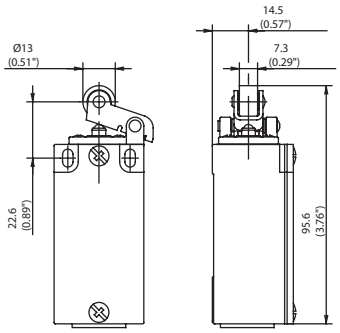

Slow-action	Snap-action
6021120057 GC-U1Z HIW 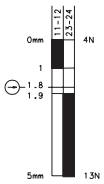	**6021370629** GC-SU1Z HIW 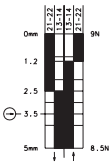
6021820175 GC-A2Z HIW 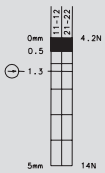	
6021820157 GC-E2 HIW 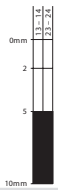	
6021320058 GC-UV1Z HIW 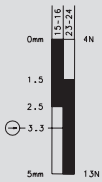	

Replacement actuator: 3912200552

Special features / variants
(on request)

- Available with different actuating directions
- Available with steel roller
- With following contacts:
  2 NC / 2 NO contact
  1 NC / 2 NO with overlap
  (larger enclosure)

GC

	FF	AF
	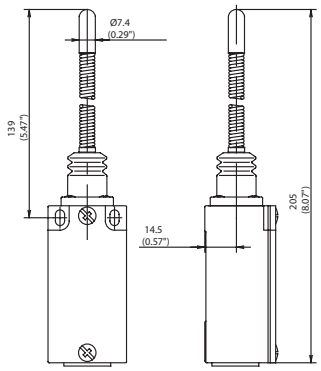	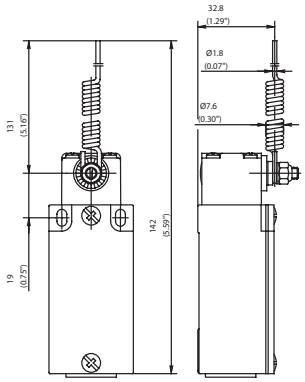
Switching operation	**Slow-action** / **Snap-action**	**Slow-action** / **Snap-action**
1 NC / 1 NO contact	**6021140476** GC-U1 FF 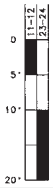 **6021190100** GC-SU1 FF 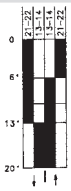	**6021139106** GC-U1 AF 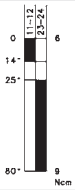 **6021189128** GC-SU1 AF 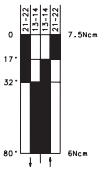
2 NC contacts		
2 NO contacts		
1 NC / 1 NO contact Overlapping		
Approvals		

Replacement actuator: 3912400510

Special features / variants
(on request)

- Different spring lengths
- Different spring versions or spring rod

Replacement actuator: 3912390725

Special features / variants
(on request)

- Available with various actuator lengths and actuator directions

DR

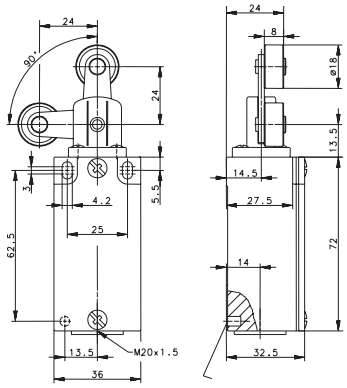

Slow-action **Snap-action**

6021191099
GC-SU1Z DR

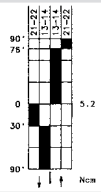

Replacement actuator: 3912410593

Special features / variants
(on request)

Metal-Enclosed Limit Switches

SN2

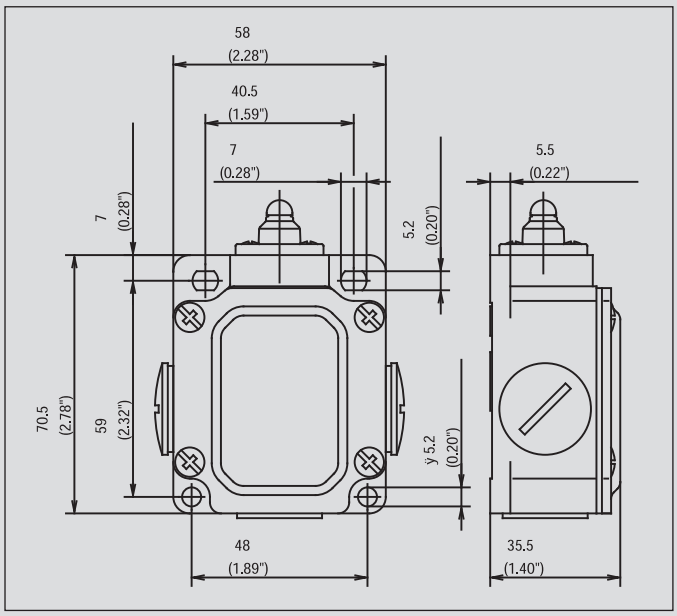

Recommended use

With its three cable entries and spacious connection area, the SN2 limit switch is the optimum solution for through-wiring or even branching off electrical circuits.

Product advantages

- Protection class IP65 to VDE 0470 T1
- Enclosure: Aluminium pressure die-casting
- Cover: Sheet aluminium
- Actuator can be repositioned by 4 x 90°
- Cable entry 3x M20 x 1.5
- Connection designation conforming to DIN EN 50013
- Metal actuators for high loads
- Graduated adjustment of AH lever
- Selectable direction-dependent contact-making of AH actuator (basic setting: contact-making both sides)

Options

- AS interface versions on request
- Preassembled with customer-specific cables and connectors on request

Design layout

- Slow-action and snap-action contacts
- Versions: 1 NC / 1NO, 2 NC
- All NC contacts with ⊖ in the circuit diagram are positively opening contacts
- Type: Zb (galvanically isolated changeover contact)
- Latching function on request

Mounting

- 2 adjustment slots for M5 screws
- 2 addition holes for M5 mounting screws in safety applications

Installation advantages

- 3 cable entries for through-wiring
- Generously dimensioned connection space
- Screw connections with self-lifting clamping plates
- Easy-to-change switching system thanks to snap-in retainer
- Finely adjustable switching point with adjusting screw

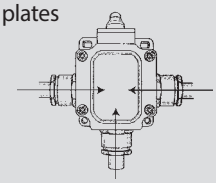

Technical data

Electrical data		
Rated insulation voltage	U_i max.	400 V AC
Conventional thermal current	I_{the}	10 A
Rated operating voltage	U_e max.	240 V
Utilization category		AC-15, A300, U_e/I_e 240 V/3 A
Short-circuit protection (up to) ①		Fuse 10 A gL/gG
Protection class		I
Mechanical data		
Enclosure material	Aluminium pressure die-casting	
Ambient temperature	–30 °C to + 80 °C	
Mechanical service life	10 x 10^6 switching cycles	
B10d (up to) ①	20 Mill.	
Switching frequency	max. 100/min.	
Type of connection	Screw connections	
Conductor cross sections	Single-wire 0.5 – 1.5 mm^2 or Stranded wire with ferrule 0.5 – 1.5 mm^2	
Cable entry	3 x M20 x 1.5	
Protection class	IP65 conforming to EN 60529, DIN VDE 0470 T1	
Standards		
conforming to EN 60947-1; EN 60947-5-1		

① Depending on switching system. See Table on Pages 72 – 75.

	W	LIW
	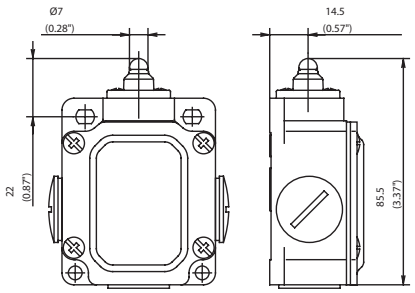	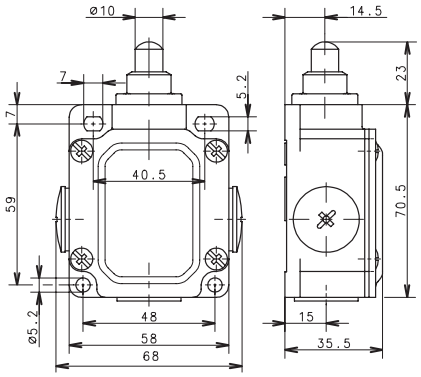
Switching operation	**Slow-action** / **Snap-action**	**Slow-action** / **Snap-action**
1 NC / 1 NO contact	**6033103023** SN2-U1Z W 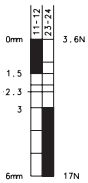 **6033353016** SN2-SU1Z W 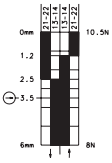	**6033194022** SN2-SU1 LIW 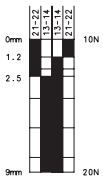
2 NC contacts		
2 NO contacts		
1 NC / 1 NO contact Overlapping		
Approvals		

Replacement actuator: –

Special features / variants
(on request)

Replacement actuator: 3912440536

Special features / variants

- Telescopic plunger, particularly long actuation travel of 9 mm

SN2

	RIW	AHS
	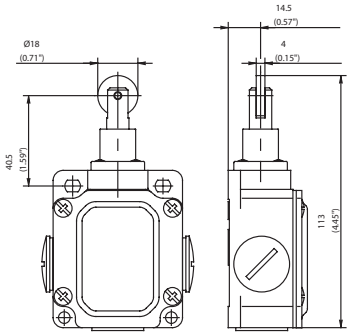	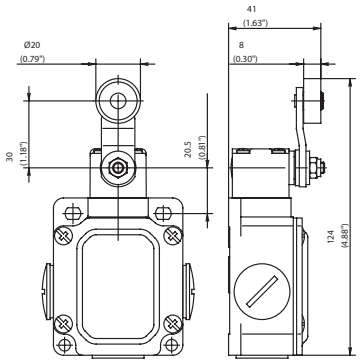

Switching operation	Slow-action	Snap-action	Slow-action	Snap-action
1 NC / 1 NO contact	**6033117025** SN2-U1Z RIW 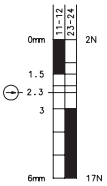	**6033367017** SN2-SU1Z RIW 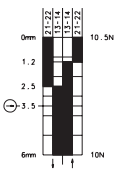	**6033135002** SN2-U1Z AHS 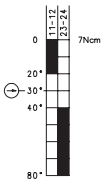	**6033385018** SN2-SU1Z AHS 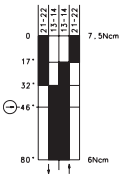
2 NC contacts				
2 NO contacts				
1 NC / 1 NO contact Overlapping				
Approvals				
	Replacement actuator: 3918170587		**Replacement actuator: 3913351913**	
	Special features / variants (on request) ● Available with different actuating directions ● With latching function		**Special features / variants** (on request) ● Available with different actuating directions	

DGHW

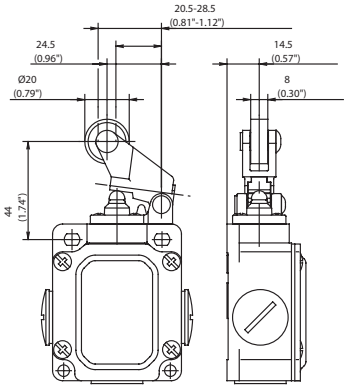

Slow-action	Snap-action
6033121005 SN2-U1Z DGHW	**6033371004** SN2-SU1Z DGHW

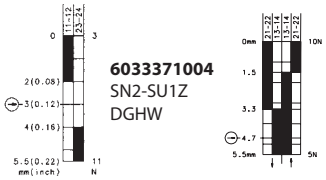

Replacement actuator: 3918211656

Special features / variants
(on request)

- Available with different actuating directions

DGKW

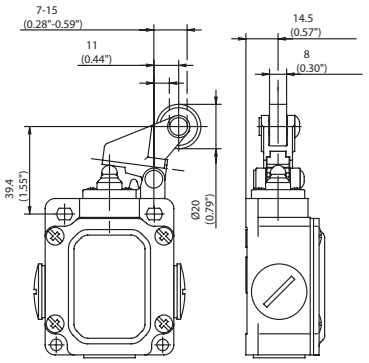

Slow-action	Snap-action
	6033377011 SN2-SU1Z DGKW

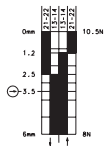

Replacement actuator: 3918271655

Special features / variants
(on request)

- Available with different actuating directions

HW

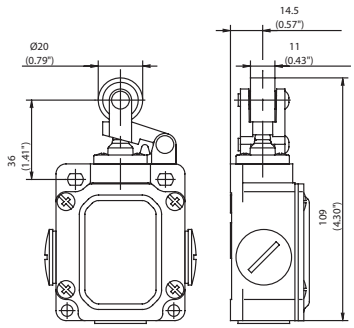

Slow-action	Snap-action
6033121007 SN2-U1Z HW	**6033371006** SN2-SU1Z HW

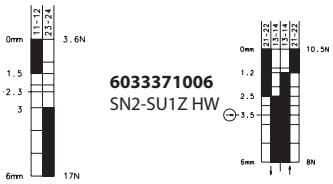

Replacement actuator: 3913210553

Special features / variants
(on request)

- Available with different actuating directions

SN2

AD4K

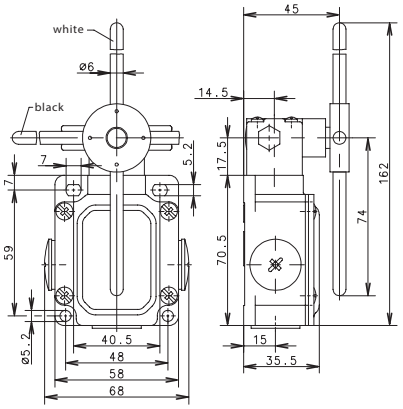

Switching operation	Slow-action	Snap-action
1 NC / 1 NO contact		
2 NC contacts	**6133887022** SN2-SA2Z AD4K	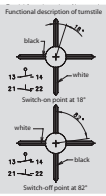
2 NO contacts		
1 NC / 1 NO contact **Overlapping**		

Approvals

Replacement actuator: 3913371712
without screws,
without seals

3992000042
accessory bag
(40 screws,
10 seals)

Special features / variants
(on request)

ENM2

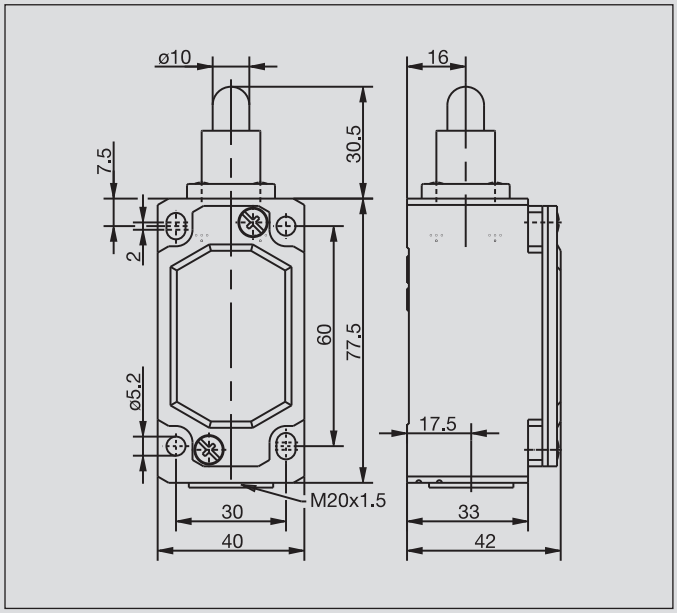

Recommended use

With its standard enclosure, the ENM2 limit switch can be used universally in all industrial and safety applications.

Product advantages

- Standard switch conforming to DIN EN 50041
- Standard actuator conforming to DIN EN 50041 (see page 15)
- Protection class IP65 to VDE 0470 T1
- Enclosure: Aluminium pressure die-casting
- Cover: Sheet aluminium
- Actuator can be repositioned by 4 x 90°
- Cable entry M20 x 1.5
- Connection designation conforming to DIN EN 50013
- Metal actuators for high loads

Options

- AS interface versions on request
- Preassembled with customer-specific cables and connectors on request

Design layout

- Slow-action and snap-action contacts
- Versions: 1 NC / 1NO, 2 NC, overlapping contacts
- All NC contacts with ⊖ in the circuit diagram are positively opening contacts
- Type: Zb (galvanically isolated changeover contact)

Mounting

- Two M5 adjustment screws with slots
- Two M5 screws for safety applications without additional securing element

Installation advantages

- Screw connections with self-lifting clamping plates
- Easy-to-change switching system thanks to snap-in retainer (depending on type)
- Finely adjustable switching point with adjusting screw
- Captive cover screws
- Enlarged connection space
- Earthing surface on same level as switching system

Technical data

Electrical data		
Rated insulation voltage (up to) ①	U_i max.	400 V AC
Conventional thermal current (up to) ①	I_{the}	10 A
Rated operating voltage	U_e max.	240 V
Utilization category (up to) ①		A300, AC-15, U_e/I_e 240 V/3 A
Short-circuit protection (up to) ①		Fuse 10 A gL/gG
Protection class		I
Mechanical data		
Enclosure material	Aluminium pressure die-casting	
Ambient temperature	–30 °C to + 80 °C	
Mechanical service life (up to) ①	10 x 10^6 switching cycles	
B10d (up to) ①	20 Mill.	
Switching frequency	≤ 100/min.	
Type of connection	Screw connections	
Conductor cross sections	Single-wire 0.5 – 1.5 mm^2 or Stranded wire with ferrule 0.5 – 1.5 mm^2	
Cable entry	1 x M20 x 1.5	
Protection class	IP65 conforming to IEC/EN 60529	
Standards		
VDE 0660 T100, DIN EN 60947-1, IEC 60947-1 VDE 0660 T200, DIN EN 60947-5-1, IEC 60947-5-1		

① Depending on switching system. See Table on Pages 72 – 75.

ENM2

	IW (Form B)	RIW (Form C)
	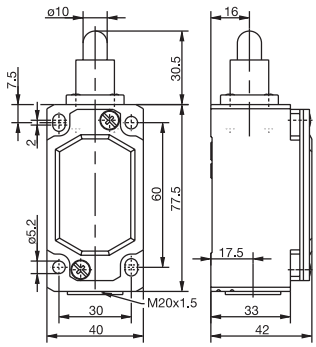	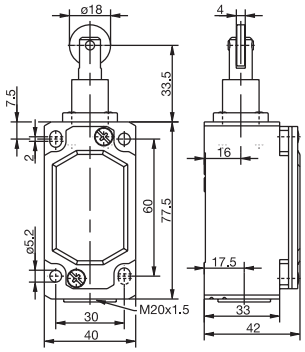

Switching operation	Slow-action	Snap-action	Slow-action	Snap-action
1 NC / 1 NO contact	**6087102001** ENM2-U1Z IW 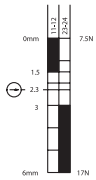	**6087352002** ENM2-SU1Z IW 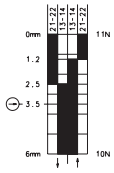	**6087117004** ENM2-U1Z RIW 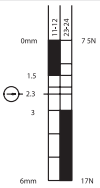	**6087367005** ENM2-SU1Z RIW 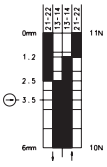
2 NC contacts	**6087802003** ENM2-A2Z IW 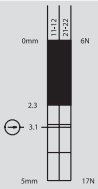		**6087817006** ENM2-A2Z RIW 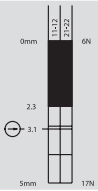	
2 NO contacts				
1 NC / 1 NO contact **Overlapping**	**6087302027** ENM2-UV1Z IW 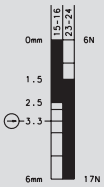			
Approvals				

Replacement actuator: 3918020584

Replacement actuator: 3918170587

Special features / variants
(on request)

- Also available with following contacts:
  2 NC /1 NO with overlap
  1 NC /2 NO with overlap

Special features / variants
(on request)

- Available with different actuating directions
- High temperature range
- Various roller diameters
- Also available with following contacts:
  2 NC / 1 NO with overlap
  1 NC / 2 NO with overlap

AHS-V (Form A)

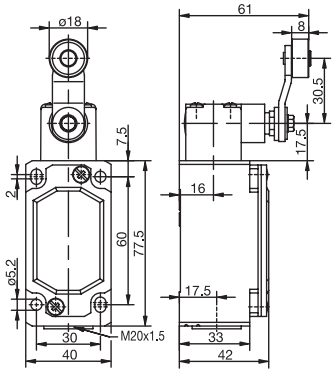

DGHW RO20

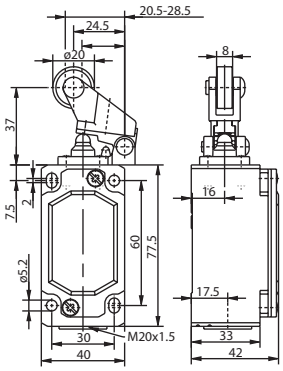

DGKW RO20

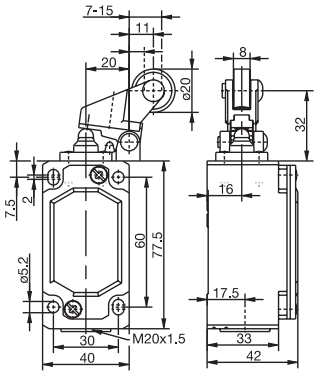

Slow-action	Snap-action
6087135013 ENM2-U1Z AHS-V	**6087385014** ENM2-SU1Z AHS-V
6087835015 ENM2-A2Z AHS-V	

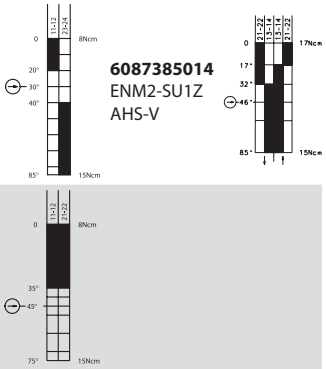

Slow-action	Snap-action
6087121007 ENM2-U1Z DGHW RO20	**6087371008** ENM2-SU1Z DGHW RO20
6087821009 ENM2-A2Z DGHW RO20	

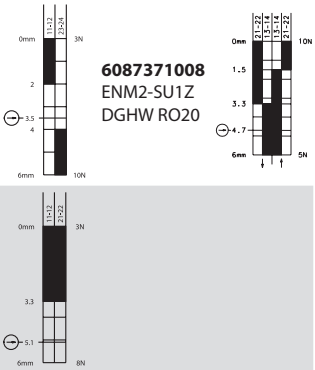

Slow-action	Snap-action
6087127010 ENM2-U1Z DGKW RO20	**6087377011** ENM2-SU1Z DGKW RO20

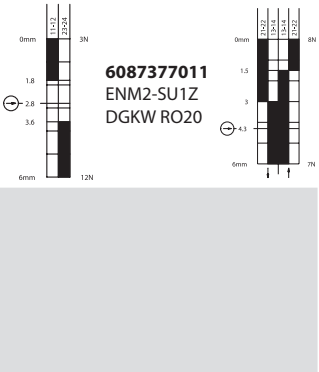

Replacement actuator: 3918350729

Special features / variants
(on request)

- Available with different actuating directions

Replacement actuator: 3918211656

Special features / variants
(on request)

- Available with different actuating directions

Replacement actuator: 3918271655

Special features / variants
(on request)

- Available with different actuating directions

ENM2

	AD (Form D)		AV	
	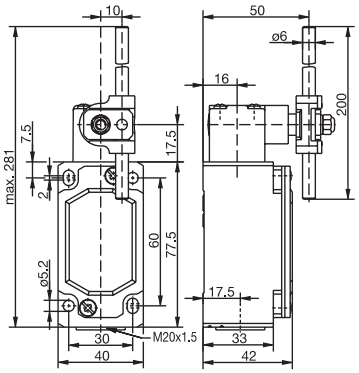		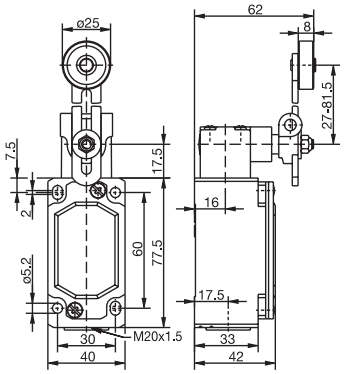	
Switching operation	**Slow-action**	**Snap-action**	**Slow-action**	**Snap-action**
1 NC / 1 NO contact	**6087137018** ENM2-U1 AD 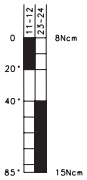	**6087387019** ENM2-SU1 AD 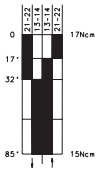	**6087136016** ENM2-U1 AV 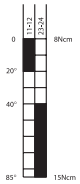	**6087386017** ENM2-SU1 AV 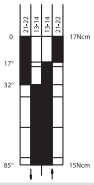
2 NC contacts				
2 NO contacts			**6187836060** ENM2-E2 AV 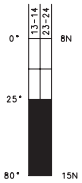	
1 NC / 1 NO contact Overlapping				
Approvals				
	Replacement actuator: 3918370731		**Replacement actuator: 3918360730**	

Special features / variants
(on request)

- Available with various actuator lengths and actuator directions

Special features / variants
(on request)

- Available with different actuating directions
- Various roller diameters
- Different lever lengths
- With roller over switch

AHZ

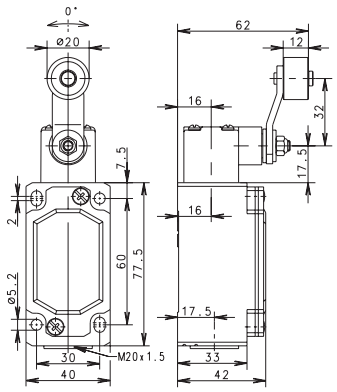

Slow-action **Snap-action**

6087135030
ENM2-U1Z
AHZ

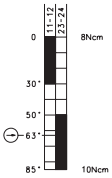

Replacement actuator: –

Special features / variants

- Positively opening action, forward and return AHZ
- For special safety applications, the positive opening action of the normally-closed contacts takes place both in forward (moving in one direction) as well as in return (moving back to home position) direction
- For personal protection applications movement of the roller must be restrained in a guide block in both directions

Metal-Enclosed Limit Switches

D

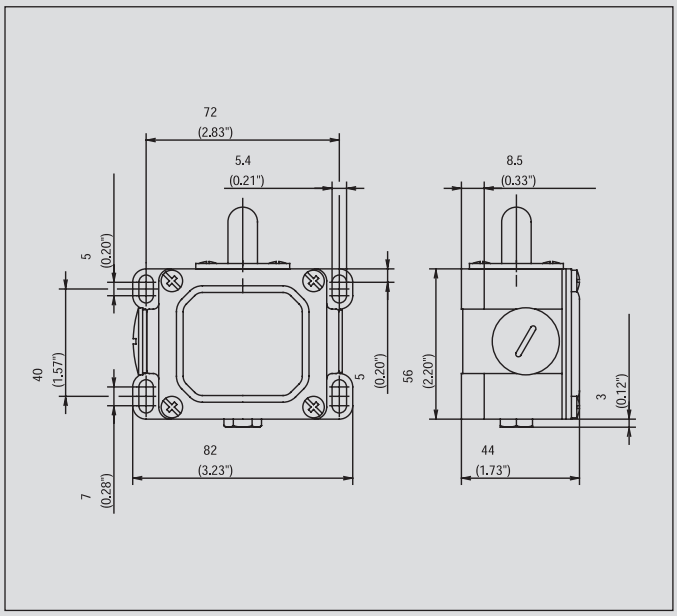

Recommended use

Heavy duty enclosure for harsh operating conditions with particularly tough design of actuator and switching systems.

Product advantages

- Protection class IP65 to VDE 0470 T1
- Enclosure: Aluminium pressure die-casting
- Cover: Sheet aluminium
- Actuator can be repositioned by 4 x 90° (depending on type)
- Cable entries 2x M20 x 1.5
- Connection designation conforming to DIN EN 50013
- Sturdy contacts
- Hard wearing guide bushes

Options

- AS interface versions on request
- Preassembled with customer-specific cables and connectors on request

Design layout

- Slow-action and snap-action contacts
- Versions: 1 NC / 1NO, 2 NC, 2 NO, 3 NC, 3 NO, overlapping contacts
- All NC contacts with ⊖ in the circuit diagram are positively opening contacts
- Latching function on request

Mounting

- 4 slots for M5 screws

Installation advantages

- 2 cable entries for through-wiring
- Generously dimensioned connection space
- Captive cover screws

Technical data

Electrical data		
Rated insulation voltage	U_i max.	400 V AC
Conventional thermal current (up to) ①	I_{the}	10 A
Rated operating voltage	U_e max.	240 V
Utilization category		AC-15, U_e/I_e 240 V/3 A
Short-circuit protection (up to) ①		Fuse 10 A gL/gG
Protection class		I
Mechanical data		
Enclosure material		Aluminium pressure die-casting
Ambient temperature		–30 °C to + 80 °C
Mechanical service life		10 x 10^6 switching cycles
B10d		20 Mill.
Switching frequency		≤ 100/min.
Type of connection		Screw connections
Conductor cross sections		Single-wire 0.5 – 1.5 mm^2 or Stranded wire with ferrule 0.5 – 1.5 mm^2
Cable entry		2 x M20 x 1.5
Protection class		IP65 conforming to IEC/EN 60529
Standards		
VDE 0660 T100, DIN EN 60947-1, IEC 60947-1 VDE 0660 T200, DIN EN 60947-5-1, IEC 60947-5-1		

① Depending on switching system. See Table on Pages 72 – 75.

	W	RW
	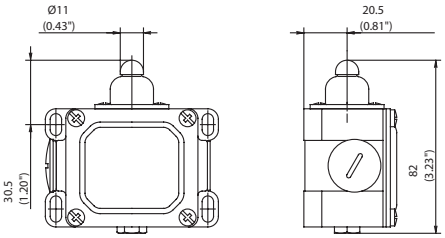	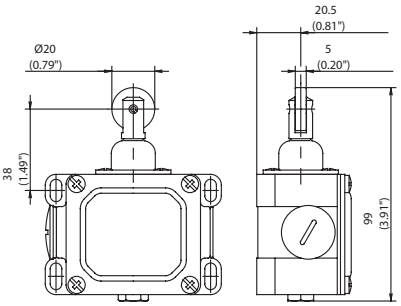

Switching operation	Slow-action	Snap-action	Slow-action	Snap-action
1 NC / 1 NO contact	**6041103002** D-U1 W 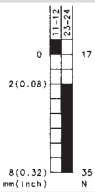	**6041153156** D-SU1 W 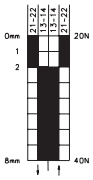	**6041118229** D-U1Z RW 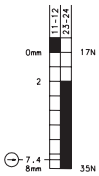	**6041168162** D-SU1 RW 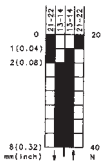
2 NC contacts	**6041803090** D-A2 W 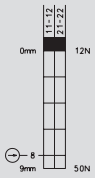		**6041818741** D-A2Z RW 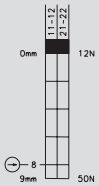	
2 NO contacts	**6041803046** D-E2 W 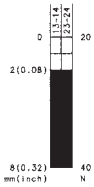		**6041818052** D-E2 RW 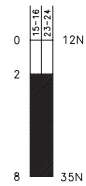	
1 NC / 1 NO contact **Overlapping**	**6041303134** D-UV1Z W 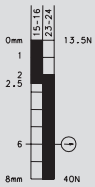		**6041318140** D-UV1Z RW 	
Approvals				

Replacement actuator: -

Special features / variants
(on request)

- Also available with following contacts:
  3 NC contacts
  3 NO contacts
  2 NC / 2 NO contact
  (larger enclosure)

Replacement actuator: –

Special features / variants
(on request)

- Available for high temperature range
- With following contacts:
  3 NC contacts
  3 NO contacts
  2 NC / 2 NO contact
  (larger enclosure)

D

	AH	HW
	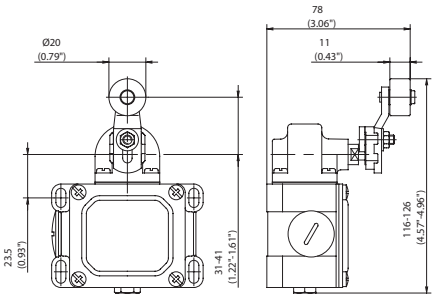	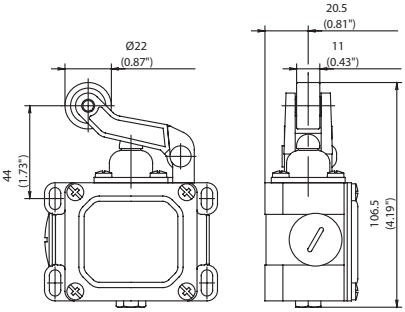

Switching operation	Slow-action	Snap-action	Slow-action	Snap-action
1 NC / 1 NO contact	**6041135019** D-U1 AH 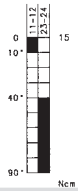	**6041185173** D-SU1 AH 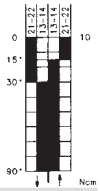	**6041121010** D-U1 HW 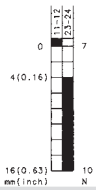	**6041171164** D-SU1 HW 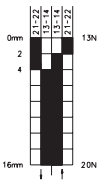
2 NC contacts	**6041835107** D-A2 AH 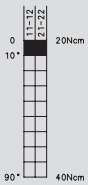			
2 NO contacts				
1 NC / 1 NO contact **Overlapping**			**6041321142** D-UV1Z HW 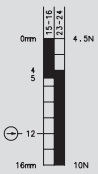	
Approvals				

Replacement actuator: 3914350924

Replacement actuator: 3914211065

Special features / variants
(on request)

- With steel roller, various roller diameters
- Cranked or straight lever
- Different lever lengths
- Also available with following contacts:
  3 NC contacts
  2 NC / 2 NO contact

Special features / variants
(on request)

- Available for high temperature range
- With following contacts:
  3 NC contacts
  2 NC / 2 NO contact
  (larger enclosure)

PW

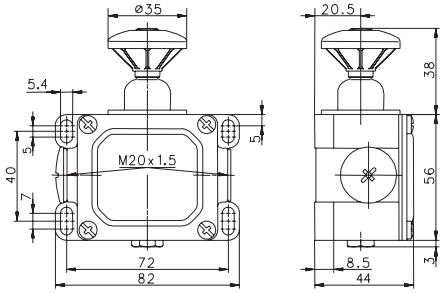

Slow-action

6041113006
D-U1 PW

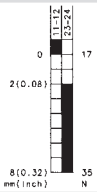

6041813835
D-A2Z PW

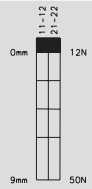

Replacement actuator: –

Special features / variants
(on request)

- Also available with following contacts:
  3 NC contacts
  3 NO contacts
  2 NC / 2 NO contact
  (larger enclosure)

Overview of Actuators

Actuator	Designation	Collar iw = internal w = external	Plastic series COMBI	TINY 2	IN62 IN65	BIGGY 2	ENK	Metal series GC I	SN 2	ENM 2	D I
Plunger	–	iw	–	–	–	–	●	–	–	–	–
	–	w	–	●	●	●	–	–	–	–	–
	–	IP30	●	–	–	–	–	–	–	–	–
	–	IP43	–	–	–	–	–	–	–	–	○
Ball	KU	iw	–	–	–	–	–	○	○	○	–
Mushroom head	P	w	–	–	–	–	–	–	–	–	●
Telescopic plunger	L	iw	–	–	–	–	–	●	○	○	–
Adjustable plunger	ST	w	–	–	–	–	–	●	○	○	●
	SM	iw	–	–	●	–	–	–	–	–	–
	SK	w	–	–	●	–	–	–	–	–	–
Plunger	ST	iw	–	–	–	–	–	●	○	○	–
	ST	IP30	●	–	–	–	–	–	–	–	–
Button	K	IP30	●	–	–	–	–	–	–	–	–
Roller	R	IP30	●	–	–	–	–	–	–	–	–
	R	iw	–	●	○	●	●	●	●	●	–
	RK	iw	–	–	●	–	–	–	–	–	–
		w	–	–	–	–	–	–	–	–	●
		IP43	–	–	–	–	–	–	–	–	○
Roller, long	R ... L	iw	–	○	●	○	–	–	–	–	–
Roller, short	R ... K	iw	–	○	●	○	–	–	–	–	–
Lever	H	IP30	●	–	–	–	–	–	–	–	–
	H	w	–	●	●	●	●	–	–	–	–
	H, HT	iw	–	–	–	–	–	●	○	○	–
	HK	iw	–	–	●	–	–	–	–	–	–
Lever, long	H/D-WI	w	–	–	–	–	–	●	●	○	●
	HL	iw	–	–	–	–	–	●	○	○	–
	HL/D-H	w	–	–	–	–	–	●	○	○	●
	D – H	IP43	–	–	–	–	–	–	–	–	○
Pivot joint, lever	DGH	w	–	○	●	○	○	○	●	●	–
	DGHK	iw	–	–	●	–	–	–	–	–	–
Pivot joint, cranked lever	DGK	w	–	○	●	○	○	○	●	●	–
	DGKK	iw	–	–	●	–	–	–	–	–	–
Cranked lever	KN	iw	–	–	–	–	–	●	○	○	–
	KN	w	–	○	●	○	–	●	○	○	○
	KNK	iw	–	–	●	–	–	–	–	–	–
Cranked lever link	KG	iw	–	–	–	–	–	●	○	○	–
	KG	w	–	○	●	○	–	●	○	○	–
Double roller	DR	iw	–	–	–	–	–	●	○	○	–
Spring feeler	FF	iw	–	–	–	–	–	●	●	○	–
	FF	w	–	●	○	●	●	–	–	–	–
Spring feeler, long	FFL	w	–	–	–	–	–	●	○	○	–
Spindle-mounted lever	AH	iw	–	●	–	●	–	●	○	○	●
	AHK	iw	–	–	●	–	–	–	–	–	–
Spindle-mounted lever, star clamping	AHS	iw	–	●	●	●	–	○	●	○	–
Spindle-mounted lever, star clamping, rubber roller	AHSGU	iw	–	–	●	–	●	–	–	–	–
Spindle-mounted lever, star clamping, fine spline	AHS-V	iw	–	–	–	–	●	○	●	●	–
Spindle-mounted lever for positive opening in forward/return dir.	AHZ	iw	–	–	–	–	–	○	○	●	–
Spindle-mounted lever, adjustable	AV	iw	–	●	–	●	●	●	○	●	●
	AVK	iw	–	–	●	–	–	–	–	–	–
Spindle-mounted lever, wire	AD	iw	–	●	–	●	●	●	○	●	○
	AHDM	iw	–	–	●	–	–	–	–	–	–
Spindle-mounted lever, spring	AF	iw	–	○	–	○	○	●	●	○	–

● Catalogue type (stock type or delivery time as per agreement) ○ Technical possible from modular system (from system layout) – Not included in design

Approach direction	Plunger direction	Approach speed/approach angle							Remarks
			m/s	0,1	0,5	1	2	5	
	⇩	Metal	A	20°	20°	10°	5°	–	● The values shown in the switching diagrams for switching travel/force refer **to plunger direction**
			B	20°	20°	10°	5°	–	
		Plastic	A	20°	20°	10°	5°	–	
			B	20°	20°	10°	5°	–	
	⇩	Metal	A	30°	5°	–	–	–	● The values shown in the switching diagrams for switching travel/force refer **to plunger direction** ● Plunger tip adjustable in ST version
			B	30°	5°	–	–	–	
		Plastic	A	30°	5°	–	–	–	
			B	30°	5°	–	–	–	
	⇩	Metal	A	30°	30°	20°	10°	5°	● The values shown in the switching diagrams for switching travel/force refer **to plunger direction**
			B	30°	30°	20°	10°	5°	
		Plastic	A	30°	30°	20°	10°	5°	
			B	30°	30°	20°	10°	5°	
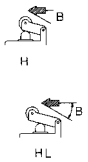	⇩	Metal	A	–	–	–	–	–	● The values shown in the switching diagrams for switching travel/force refer **to plunger direction**
			B	20°	20°	10°	–	–	
		Plastic	A	–	–	–	–	–	
			B	40°	40°	30°	20°	10°	
	⇩	Metal	A	–	–	–	–	–	● The values shown in the switching diagrams for switching travel / force refer **to plunger direction** ● Adjustable upper section of actuator with roller
			B	20°	20°	10°	–		
		Plastic	A	–	–	–	–	–	
			B	40°	40°	30°	20°	10°	
	⇩	Metal	A	–	–	–	–	–	● The values shown in the switching diagrams for switching travel / force refer to **90° to plunger direction** ● Adjustable upper section of actuator with roller
			B	30°	30°	20°	10°	–	
		Plastic	A	–	–	–	–	–	
			B	40°	40°	40°	30°	20°	
	⇩	Metal	A	–	–	–	–	–	● The values shown in the switching diagrams for switching travel / force refer to **90° to plunger direction**
			B	30°	30°	20°	10°	–	
		Plastic	A	–	–	–	–	–	
			B	40°	40°	40°	30°	20°	
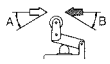	⇩	Metal	A	–	–	–	–	–	● The values shown in the switching diagrams for switching travel / force refer **to plunger direction**
			B	40°	40°	30°	20°	–	
		Plastic	A	–	–	–	–	–	
			B	40°	40°	40°	30°	20°	
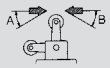	⇩	Metal	A	45°	45°	40°	30°	–	● The values shown in the switching diagrams for switching travel / force refer **to direction of rotation** ● Switch position retained after actuation
			B	45°	45°	40°	30°	–	
		Plastic	A	–	–	–	–	–	
			B	–	–	–	–	–	
	⇩	Metal	A	60°	50°	45°	–	–	● The values shown in the switching diagrams for switching angle / actuation torque refer **to any approach direction** ● Not suitable for personal protection
			B	–	–	–	–	–	
		Plastic	A	20°	20°	10°	5°	–	
			B	–	–	–	–	–	
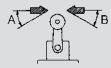	⇩	Metal	A	45°	45°	45°	40°	30°	● The values shown in the switching diagrams for switching angle / actuation torque refer **to direction of rotation** ● Graduated adjustment of roller lever on spindle with 180° repositioning
			B	45°	45°	45°	40°	30°	
		Plastic	A	45°	45°	45°	40°	30°	
			B	45°	45°	45°	40°	30°	
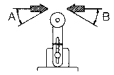	⇩	Metal	A	45°	45°	45°	40°	30°	● The values shown in the switching diagrams for switching angle / actuation torque refer **to direction of rotation** ● Graduated adjustment of roller lever on spindle with 180° repositioning ● Not suitable for personal protection
			B	45°	45°	45°	40°	30°	
		Plastic	A	45°	45°	45°	40°	30°	
			B	45°	45°	45°	40°	30°	
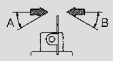	⇩	Metal	A	45°	45°	40°	30°	20°	● The values shown in the switching diagrams for switching angle / actuation torque refer **to direction of rotation** ● Graduate adjustment of rod about pivot axis and in longitudinal direction
			B	45°	45°	40°	30°	20°	
		Plastic	A	45°	45°	40°	30°	20°	
			B	45°	45°	40°	30°	20°	
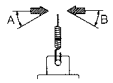	⇩	Metal	A	45°	45°	40°	30°	20°	● The values shown in the switching diagrams for switching angle / actuation torque refer **to direction of rotation** ● Graduated adjustment of spring about pivot axis ● Not suitable for personal protection
			B	45°	45°	40°	30°	20°	
		Plastic	A	45°	45°	40°	30°	20°	
			B	45°	45°	40°	30°	20°	

Limit Switch – Spindle-Mounted Lever

Switching devices with spindle-mounted lever enclosure

On delivery, contact-making takes place in both pivot directions corresponding to the switching diagrams.

Adaptation of basic actuator setting on spindle

The basic setting of the device can be varied in steps and fixed for exact positioning:

- AH, AHS, AHZ, AF, AD, AV:
  Adjustment in steps of 15° (Fig. 1)
- AHS-V:
  Adjustment in steps of 7.5° or 15° (only here ⊖) by repositioning the intermediate piece (Fig. 2)
- Adaptation AV, AD:
  Adjustment in radial direction
- AH, AHS, AHS-V, AHZ, AV:
  The roller levers can be used in a different axial actuating plane by repositioning by 180° (Fig. 3 and 4)

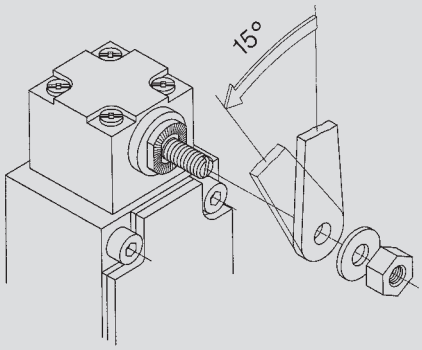

Fig. 1

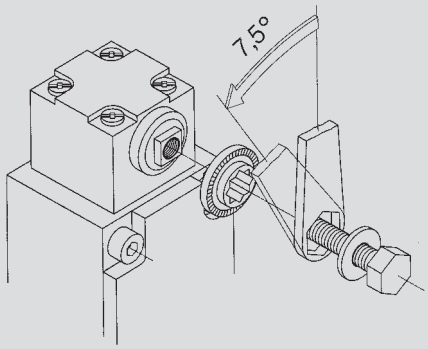

Fig. 2

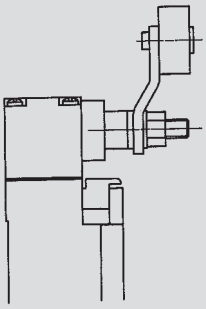

Fig. 3

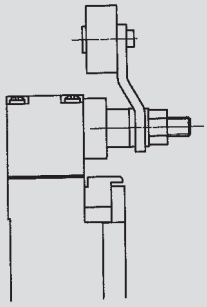

Fig. 4

Adaptation of direction-independent switching function

With actuators AHS, AHS-V, AV, AD.

On delivery, contact-making takes place in both pivot directions corresponding to the switching diagrams. An idle function in the required pivot direction is achieved by simply repositioning the actuator cam (Fig. 5 and 6).

The idle function can be used in control systems that cannot process successive rebound pulses caused by oscillatory movement of extremely long AV/AD actuators.

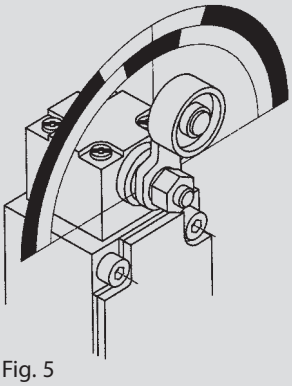

Fig. 5

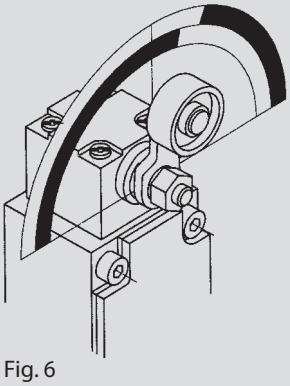

Fig. 6

Positive opening action Forward and return AHZ

For special safety applications, the positive opening action of the normally-closed contacts takes place both in forward (moving in one direction) as well as in return (moving back to home position) direction. For personal protection applications movement of the roller must be restrained in a guide block in both directions (Fig. 7 and 8).

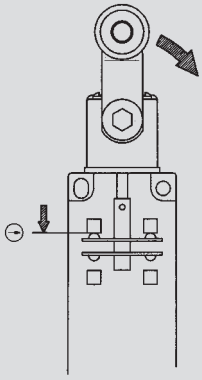

Fig. 7

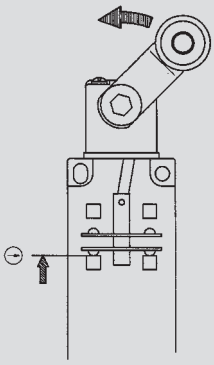

Fig. 8

Note on changing actuators AH, AHS, AHS-V, AHZ, AF, AD, AV, DGH, DGK

The guaranteed as-delivered properties change when the actuation directions are adjusted and when actuators are repositioned by 90°.

The user himself must ensure that the device achieves safe operation for its intended purpose.

Accessories for Insulation-Enclosed Limit Switches

The Finger guard help to prevent the user from an electric shock.

The guide element allows additional support to the rear of the switch.

Article	**Finger guard**	**Guide element**
Series	**Biggy 2, ENK**	**IN62 / IN65 / I81**
Article number	**3595900060**	**3515900209**

The mounting plate allows IN62 / IN65 / I81 switches to be din rail mounted in control enclosures.

Article	**Mounting plate, control cabinet**	**Sealed cable gland**
Series	**IN62 / IN65**	**M16** / **M20**
Article number	**3595900087**	**3998000120** / **3998000121**

Article	**NPT adapter M16 on 1/2" (NPT 14)**	**NPT adapter M20 on 1/2" (NPT 14)**
Series	**Various families**	**Various families**
Article number	**3998000115**	**3998000116**

Electrical data

Type 1 switches

Slow-action contact			C2 / Ti2							
Switching function	**Switching contacts**	**Designation**	**U_i**	**I_{the}**	**Utilization category**	**Short-circuit protection**	**Mechanical service life**	**B10d**	**U_i**	**I_{the}**
Normally-closed contact	2NC	A2Z	250 V	10 A	AC-15 U_e/I_e 240 V/3 A	Fuse 6 A gL/gG	3×10^6	6 mill.	250 V	10 A
Changeover contact	1NC/1S	U1Z	250 V	10 A	AC-15 U_e/I_e 240 V/3 A	Fuse 6 A gL/gG	3×10^6	6 mill.	250 V	10 A
Changeover contact, overlapping	1NC/1S	UV1Z	–	–	–	–	–	–	–	–
Normally-open contact	2S	E2	250 V	10 A	AC-15 U_e/I_e 240 V/3 A	Fuse 6 A gL/gG	3×10^6	–	–	–

Snap-action contact			C2 / Ti2							
Switching function	**Switching contacts**	**Designation**	**U_i**	**I_{the}**	**Utilization category**	**Short-circuit protection**	**Mechanical service life**	**B10d**	**U_i**	**I_{the}**
Normally-closed contact	2NC	SA2Z	250 V	10 A	AC-15 U_e/I_e 240 V/3 A	Fuse 6 A gL/gG	3×10^6	6 mill.	250 V	10 A
Changeover contact	1NC/1S	SU1Z	250 V	10 A	AC-15 U_e/I_e 240 V/3 A	Fuse 6 A gL/gG	3×10^6	6 mill.	250 V	10 A
Normally-open contact	2S	SE2	250 V	10 A	AC-15 U_e/I_e 240 V/3 A	Fuse 6 A gL/gG	3×10^6	–	–	–

Slow-action contact			Bi2							
Switching function	**Switching contacts**	**Designation**	**U_i**	**I_{the}**	**Utilization category**	**Short-circuit protection**	**Mechanical service life**	**B10d**	**U_i**	**I_{the}**
Normally-closed contact	2NC	A2Z	400 V	10 A	AC-15 U_e/I_e 240 V/3 A	Fuse 6 A gL/gG	1×10^6	2 mill.	400 V	5 A
Changeover contact	1NC / 1NO	U1Z	400 V	10 A	AC-15 U_e/I_e 240 V/3 A	Fuse 10 A gL/gG	10×10^6	20 mill.	400 V	10 A
Changeover contact, overlapping	1NC / 1NO	UV1Z	400 V	10 A	AC-15 U_e/I_e 240 V/3 A	Fuse 10 A gL/gG	10×10^6	20 mill.	400 V	10 A
Normally-open contact	2S	E2	–	–	–	–	–	–	–	–

Snap-action contact			Bi2							
Switching function	**Switching contacts**	**Designation**	**U_i**	**I_{the}**	**Utilization category**	**Short-circuit protection**	**Mechanical service life**	**B10d**	**U_i**	**I_{the}**
Normally-closed contact	2NC	SA2Z	–	–	–	–	–	–	–	–
Changeover contact	1NC / NO	SU1Z	400 V	10 A	AC-15 U_e/I_e 240 V/3 A	Fuse 2 A gL/gG	10×10^6	20 mill.	400 V	10 A
Normally-open contact	2S	SE2	–	–	–	–	–	–	–	–

Slow-action contact			GC							
Switching function	**Switching contacts**	**Designation**	**U_i**	**I_{the}**	**Utilization category**	**Short-circuit protection**	**Mechanical service life**	**B10d**	**U_i**	**I_{the}**
Normally-closed contact	2NC	A2Z	400 V	6 A	–	Fuse 6 A gL/gG	1×10^5	0,2 mill.①	400 V	10 A
Changeover contact	1NC / 1NO	U1Z	400 V	10 A	AC-15 U_e/I_e 240 V/3 A	Fuse 10 A gL/gG	10×10^6	20 mill.②	400 V	10 A
Changeover contact, overlapping	1NC / 1NO	UV1Z	400 V	10 A	AC-15 U_e/I_e 240 V/3 A	Fuse 10 A gL/gG	10×10^6	20 mill.	–	–
Normally-open contact	2S	E2	400 V	6 A	–	Fuse 6 A gL/gG	3×10^6	–	–	–

① 6021820175 GC-A2 HIW = 20 million ② 60121100622 GC-U1Z VKS, 6121100623 GC-U1Z VKW = 2 million

Snap-action contact			GC							
Switching function	**Switching contacts**	**Designation**	**U_i**	**I_{the}**	**Utilization category**	**Short-circuit protection**	**Mechanical service life**	**B10d**	**U_i**	**I_{the}**
Normally-closed contact	2NC	SA2Z	–	–	–	–	–	–	–	–
Changeover contact	1NC / 1NO	SU1Z	400 V	10 A	AC-15 U_e/I_e 240 V/3 A	Fuse 2 A gL/gG	10×10^6	20 mill.	400 V	10 A
Normally-open contact	2S	SE2	–	–	–	–	–	–	–	–

IF				I88					
Utilization category	**Short-circuit protection**	**Mechanical service life**	**B10d**	**U_i**	**I_{the}**	**Utilization category**	**Short-circuit protection**	**Mechanical service life**	**B10d**
AC-15 U_e/I_e 240 V/3 A	Fuse 6 A gL/gG	3 x 10^6	6 mill.	250 V	5 A	AC-15 U_e/I_e 240 V/1.5 A	Fuse 6 A gL/gG	1 x 10^6	2 mill.
AC-15 U_e/I_e 240 V/3 A	Fuse 6 A gL/gG	3 x 10^6	6 mill.	250 V	10 A	AC-15 U_e/I_e 240 V/3 A	Fuse 10 A gL/gG	10 x 10^6	20 mill.
–	–	–	–	250 V	10 A	AC-15 U_e/I_e 240 V/3 A	Fuse 10 A gL/gG	10 x 10^6	20 mill.
–	–	–	–	250 V	5 A	AC-15 U_e/I_e 240 V/1.5 A	Fuse 6 A gL/gG	1 x 10^6	–

IF				I88					
Utilization category	**Short-circuit protection**	**Mechanical service life**	**B10d**	**U_i**	**I_{the}**	**Utilization category**	**Short-circuit protection**	**Mechanical service life**	**B10d**
AC-15 U_e/I_e 240 V/3 A	Fuse 6 A gL/gG	3 x 10^6	6 mill.	–	–	–	–	–	–
AC-15 U_e/I_e 240 V/3 A	Fuse 6 A gL/gG	3 x 10^6	6 mill.	250 V	10 A	AC-15 U_e/I_e 240 V/3 A	Fuse 2 A gL/gG	10 x 10^6	20 mill.
–	–	–	–	–	–	–	–	–	–

ENK			
Utilization category	**Short-circuit protection**	**Mechanical service life**	**B10d**
AC-15 U_e/I_e 240 V/1.5 A	Fuse 6 A gL/gG	1 x 10^6	2 mill.
AC-15 U_e/I_e 240 V/3 A	Fuse 10 A gL/gG	10 x 10^6	20 mill.*
AC-15 U_e/I_e 240 V/3 A	Fuse 10 A gL/gG	10 x 10^6	20 mill.
–	–	–	–

*6181135251 ENK-U1Z AHSGU RAST RO50 = 2 million

ENK			
Utilization category	**Short-circuit protection**	**Mechanical service life**	**B10d**
–	–	–	–
AC-15 U_e/I_e 240 V/3 A	Fuse 2 A gL/gG	10 x 10^6	20 mill.
–	–	–	–

SN2				ENM2					
Utilization category	**Short-circuit protection**	**Mechanical service life**	**B10d**	**U_i**	**I_{the}**	**Utilization category**	**Short-circuit protection**	**Mechanical service life**	**B10d**
AC-15 U_e/I_e 240 V/3 A	Fuse 6 A gL/gG	10 x 10^6	20 mill.	250 V	10 A	AC-15 U_e/I_e 240 V/3 A	Fuse 6 A gL/gG	1 x 10^6	2 mill.
AC-15 U_e/I_e 240 V/3 A	Fuse 10 A gL/gG	–	20 mill.	400 V	10 A	AC-15 U_e/I_e 240 V/3 A	Fuse 10 A gL/gG	10 x 10^6	20 mill.*
–	–	–	–	400 V	10 A	AC-15 U_e/I_e 240 V/3 A	Fuse 10 A gL/gG	10 x 10^6	20 mill.
–	–	–	–	250 V	10 A	AC-15 U_e/I_e 240 V/3 A	Fuse 10 A gL/gG	10 x 10^6	–

*6087135013 ENM2-U1Z AHS-V, 6087135030 ENM2-U1Z AHZ = 2 million

SN2				ENM2					
Utilization category	**Short-circuit protection**	**Mechanical service life**	**B10d**	**U_i**	**I_{the}**	**Utilization category**	**Short-circuit protection**	**Mechanical service life**	**B10d**
–	–	–	–	250 V	10 A	AC-15 U_e/I_e 240 V/3 A	Fuse 6 A gL/gG	3 x 10^6	6 mill.
AC-15 U_e/I_e 240 V/3 A	Fuse 2 A gL/gG	10 x 10^6	20 mill.	400 V	10 A	AC-15 U_e/I_e 240 V/3 A	Fuse 2 A gL/gG	10 x 10^6	20 mill.
–	–	–	–	250 V	10 A	AC-15 U_e/I_e 240 V/3 A	Fuse 6 A gL/gG	3 x 10^6	–

Electrical data

Type 1 switches

Slow-action contact			D					
Switching function	**Switching contacts**	**Designation**	**U_i**	**I_{the}**	**Utilization category**	**Short-circuit protection**	**Mechanical service life**	**B10d**
Normally-closed contact	2NC	A2Z	400 V	10 A	AC-15 U_e/I_e 240 V/3 A	Fuse 10 A gL/gG	10×10^6	20 mill.
Changeover contact	1NC/1S	U1Z	400 V	10 A	AC-15 U_e/I_e 240 V/3 A	Fuse 10 A gL/gG	10×10^6	20 mill.
Changeover contact, overlapping	1NC/1S	UV1Z	400 V	16 A	AC-15 U_e/I_e 240 V/3 A	Fuse 10 A gL/gG	10×10^6	20 mill.
Normally-open contact	2S	E2	400 V	10 A	AC-15 U_e/I_e 240 V/3 A	Fuse 10 A gL/gG	10×10^6	–

Snap-action contact			D					
Switching function	**Switching contacts**	**Designation**	**U_i**	**I_{the}**	**Utilization category**	**Short-circuit protection**	**Mechanical service life**	**B10d**
			–	–	–	–	–	–
Normally-closed contact	2NC	SA2Z	–	–	–	–	–	–
Changeover contact	1NC/1S	SU1Z	400 V	10 A	AC-15 U_e/I_e 240 V/3 A	Fuse 10 A gL/gG	10×10^6	20 mill.
Normally-open contact	2S	SE2	–	–	–	–	–	–

Type 2 switches

Slow-action contact			SKT							
Switching function	**Switching contacts**	**Designation**	**U_i**	**I_{the}**	**Utilization category**	**Short-circuit protection**	**Mechanical service life**	**B10d**	**U_i**	**I_{the}**
Normally-closed contact	1NC	A1Z								
Normally-closed contact	2NC	A2Z	250 V	10 A	AC-15 U_e/I_e 240 V/3 A DC-13 U_e/I_e 250V / 0.27 A	Fuse 6 A gL/gG	A* 1×10^6 B* 1×10^5	2 mill.	250 V	10 A
Changeover contact	1NC/1S	U1/U1Z	250 V	10 A	AC-15 U_e/I_e 240 V/3 A DC-13 U_e/I_e 250V / 0.27 A	Fuse 6 A gL/gG	A* $\times 10^6$ B* 1×10^5	2 mill.	250 V	10 A
Changeover contact, overlapping	2NC/1S	UV15Z	250 V	5 A	–	–	–	–	250 V	5 A
							*A = Standard; B = Increased actuating force			

Slow-action contact			SK							
Switching function	**Switching contacts**	**Designation**	**U_i**	**I_{the}**	**Utilization category**	**Short-circuit protection**	**Mechanical service life**	**B10d**	**U_i**	**I_{the}**
Normally-closed contact	1NC	A1Z	–	–	–	–	–	–	–	–
Normally-closed contact	2NC	A2Z	250 V	10 A	AC-15 U_e/I_e 240 V/3 A	Fuse 6 A gL/gG	1×10^6	2 mill.		
Changeover contact	1NC/1S	U1/U1Z	250 V	10 A	AC-15 U_e/I_e 240 V/3 A	Fuse 10 A gL/gG	1×10^6	2 mill.	250 V	10 A
Changeover contact, overlapping	2NC/1S	UV15Z	400 V	5 A	AC-15 U_e/I_e 240 V/1.5 A	Fuse 6 A gL/gG	1×10^6	2 mill.	–	–

Slow-action contact			ENM2							
Switching function	**Switching contacts**	**Designation**	**U_i**	**I_{the}**	**Utilization category**	**Short-circuit protection**	**Mechanical service life**	**B10d**	**U_i**	**I_{the}**
Normally-closed contact	1NC	A1Z	–	–	–	–	–	–	–	–
Normally-closed contact	2NC	A2Z	400 V	10 A	AC-15 U_e/I_e 240 V/3 A	Fuse 6 A gL/gG	1×10^6	2 mill.	400 V	6 A
Changeover contact	1NC/1S	U1/U1Z	400 V	10 A	AC-15 U_e/I_e 240 V/3 A	Fuse 10 A gL/gG	1×10^6	2 mill.	400 V	10 A
Changeover contact, overlapping	2NC/1S	UV15Z	250 V	5 A	AC-15 U_e/I_e 240 V/1.5 A	Fuse 6 A gL/gG	1×10^6	2 mill.		

U_i Rated insulation voltage
I_{the} Conventional thermal output from devices in enclosure

SKI				SKC					
Utilization category	Short-circuit protection	Mechanical service life	B10d	U_i	I_{the}	Utilization category	Short-circuit protection	Mechanical service life	B10d
				250 V	5 A	AC-15 U_e/I_e 240 V/1,5 A	Fuse 6 A gL/gG	1 x 10^6	2 mill.
AC-15 U_e/I_e 240 V/3 A	Fuse 6 A gL/gG	A* 1 x 10^6 B* 1 x 10^5	2 mill.	–	–	–	–	–	–
AC-15 U_e/I_e 240 V/3 A	Fuse 10 A gL/gG	A*1 x 10^6 B* 1 x 10^5	2 mill.	–	–	–	–	–	–
AC-15 U_e/I_e 240 V/1.5 A	Fuse 6 A gL/gG	A* 1 x 10^6 B* 1 x 10^5	2 mill.	–	–	–	–	–	–
		*A = Standard; B = Increased actuating force							

I88				ENK					
Utilization category	Short-circuit protection	Mechanical service life	B10d	U_i	I_{the}	Utilization category	Short-circuit protection	Mechanical service life	B10d
–	–	–	–	–	–	–	–	–	–
				400 V	10 A	AC-15 U_e/I_e 240 V/3 A	Fuse 6 A gL/gG	1 x 10^6	2 mill.
AC-15 U_e/I_e 240 V/3 A	Fuse 10 A gL/gG	1 x 10^6	2 mill.	400 V	10 A	AC-15 U_e/I_e 240 V/3 A	Fuse 10 A gL/gG	1 x 10^6	2 mill.
–	–	–	–	400 V	5 A	AC-15 U_e/I_e 240 V/1.5 A	Fuse 6 A gL/gG	1 x 10^6	2 mill.

GC			
Utilization category	Short-circuit protection	Mechanical service life	B10d
–	–	–	–
AC-15 U_e/I_e 240 V/3 A	Fuse 6 A gL/gG	1 x 10^6	2 mill.
AC-15 U_e/I_e 240 V/3 A	Fuse 10 A gL/gG	1 x 10^6	2 mill.

Safety Switches with Separate Actuator

SKT

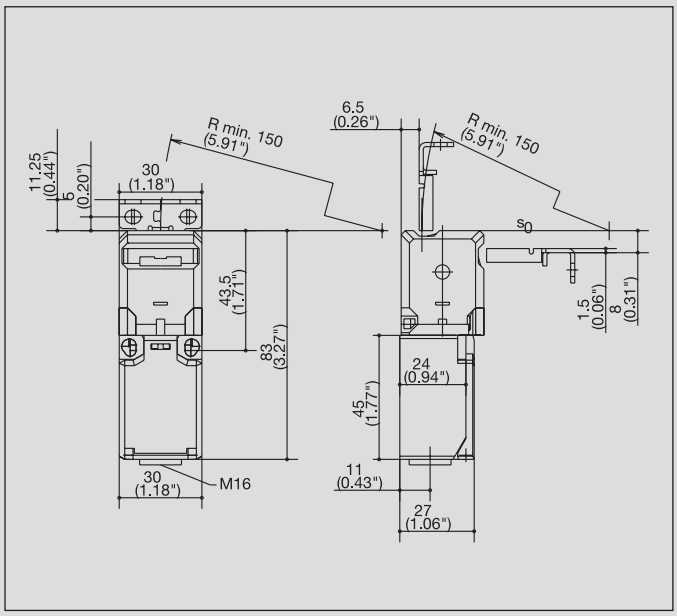

Safety switches with separate actuator are positive opening position switches. In terms of design, the switching element and actuator are separated. On actuation, the switching element and actuator are either brought together or separated. The positive opening NC contact is always open when the actuator is withdrawn. These switches are assigned to Type 2.

BERNSTEIN offers various versions of these Type 2 switches. The differences and advantages of the individual switch groups are outlined in the following.

The SKT is the smallest safety switch with a separate actuator. It is particularly suited for applications that require an extremely slim and short switch design. Its rotary head, two actuator openings and various switching functions underscore its versatility in extremely confined spaces.

Added to this, the SKT features other options to meet any requirements:

- **Integrated eject function (FE):**
  The actuator is ejected if the door is not locked securely. Consequently, the safety contact is opened, thus preventing the machine from starting up. In addition, this function makes it apparent that the door still needs to be locked.

- **Actuating force (up to 50 N):**
  The standard actuating force is 10 N. Depending on the switch variant, an actuating force of 50 N can also be selected. In many applications, hatches and doors need to be secured to prevent them being opened unintentionally. This is achieved by means of bolts, fasteners or other latching mechanisms. The SKI safety switch should be selected for applications requiring increased actuating force.

- **Universal Hinged Actuator (MRU):**
  The MRU actuator is ideally suited for applications where the installation conditions severely restrict the actuating travel or radius. It has an adjustable actuating radius in the horizontal and vertical plane.

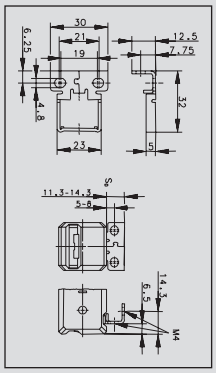

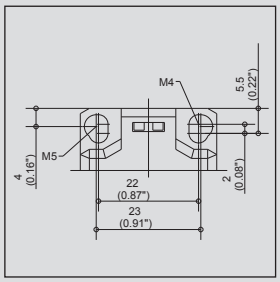

R_{min} 150 mm
Actuating forces FE to FI50

Technical data

Electrical data		
Rated insulation voltage	U_i max.	250 V
Rated operating voltage	U_e max.	240 V AC
Conventional thermal current	I_{the}	10 A
Utilization category		AC-15, U_e/I_e 240 V / 3 A; DC-13, U_e/I_e 250 V / 0.27 A
Mechanical data		
Switching frequency		≤ 30/min
Mechanical service life Standard Mechanical service life encreased actuator holding force		1 x 10^6 switching cycles 1 x 10^5 switching cycles
B10d (up to) ①		2 Mill.
Short-circuit protection		Fuse 6 A gL/gG
Protection class		II, Insulated
Ambient temperature		–30 °C to + 80 °C
Protection class		IP65 conforming to IEC/EN 60529
Type of connection		Screw connections
Conductor cross sections		Single-wire 0.5 – 1.5 mm^2 or Stranded wire with ferrule 0.5 – 1.5 mm^2
Enclosure		Thermoplastic, glass fibre-reinforced (UL94-V0)
Cable entry		M16 x 1.5
Standards		
VDE 0660 T100, DIN EN 60947-1, IEC 60947-1 VDE 0660 T200, DIN EN 60947-5-1, IEC 60947-5-1		

① Depending on switching system. See Table on Pages 72 – 75.

SKI

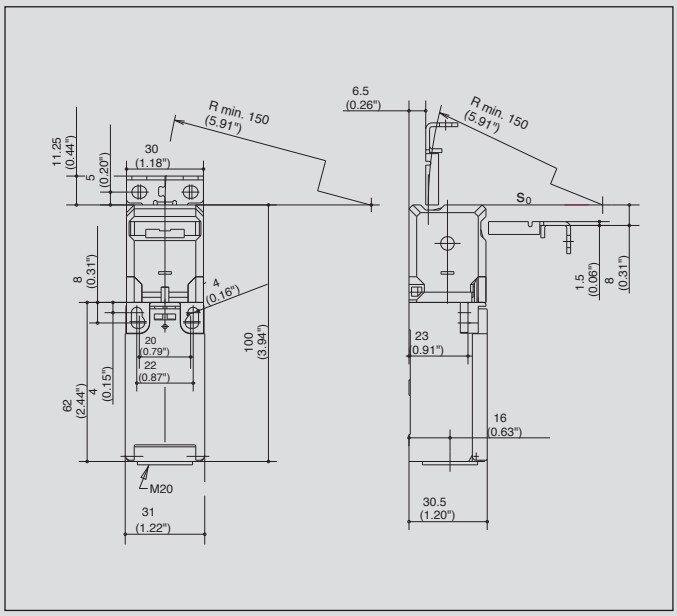

The SKI is the slimline version of a safety switch with a separate actuator. It is based on the BERNSTEIN I88 family. Its dimensions, not including the actuating head, correspond to EN 50047.

The actuating head is rotary mounted and has two actuator openings. The SKI safety switch is predestined for installation on section structures and in applications with confined installation conditions. Compared to the SKT, it offers more connection space for the wiring and variants with up to three switching contacts available.

Other advantages of this series include:

- **Integrated eject function (FE):**

  The actuator is ejected if the door is not locked securely. Consequently, the safety contact is opened, thus preventing the machine from starting up. In addition, this function makes it apparent that the door still needs to be locked.

- **Actuating force (up to 50 N):**

  The standard actuating force is 10 N. Depending on the switch variant, an actuating force of 50 N can also be selected. In many applications, hatches and doors need to be secured to prevent them from being opened unintentionally. This is achieved by means of bolts, fasteners or other latching mechanisms. The SKI safety switch should be selected for applications requiring increased actuating force.

- **Universal radius actuator (MRU):**

  The MRU actuator is ideally suited for applications where the installation conditions severely restrict the actuating travel or radius. It has an adjustable actuating radius in the horizontal and vertical plane.

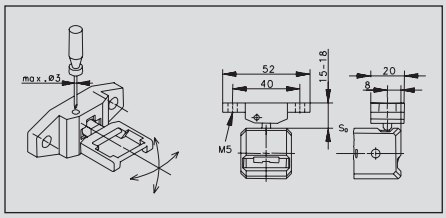

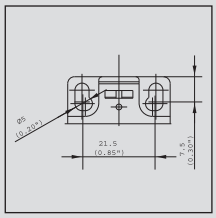

R_{min} in setting directions 50 mm
Actuating forces FE to FI50

Technical data

Electrical data		
Rated insulation voltage	U_i max.	250 V AC
Rated operating voltage	U_e max.	240 V
Conventional thermal current (up to) ①	I_{the}	10 A
Utilization category (up to) ①		AC-15, U_e /I_e 240 V / 3 A
Mechanical data		
Switching frequency		≤ 30/min.
Mechanical service life Standard Mechanical service life encreased actuator holding force		1 x 10^6 switching cycles 1 x 10^5 switching cycles
B10d (up to) ①		2 Mill.
Short-circuit protection		Fuse 6 A gL/gG
Protection class		II, Insulated
Ambient temperature		–30 °C to + 80 °C
Protection class		IP65 conforming to IEC/EN 60529
Type of connection		Screw connections
Conductor cross sections		Single-wire 0.5 – 1.5 mm^2 or Stranded wire with ferrule 0.5 – 1.5 mm^2
Enclosure		Thermoplastic, glass fibre-reinforced (UL94-V0)
Cable entry		1 x M20 x 1.5
Standards		
VDE 0660 T100, DIN EN 60947-1, IEC 60947-1 VDE 0660 T200, DIN EN 60947-5-1, IEC 60947-5-1		

① Depending on switching system. See Table on Pages 72 – 75.

Safety Switches with Separate Actuator

SK

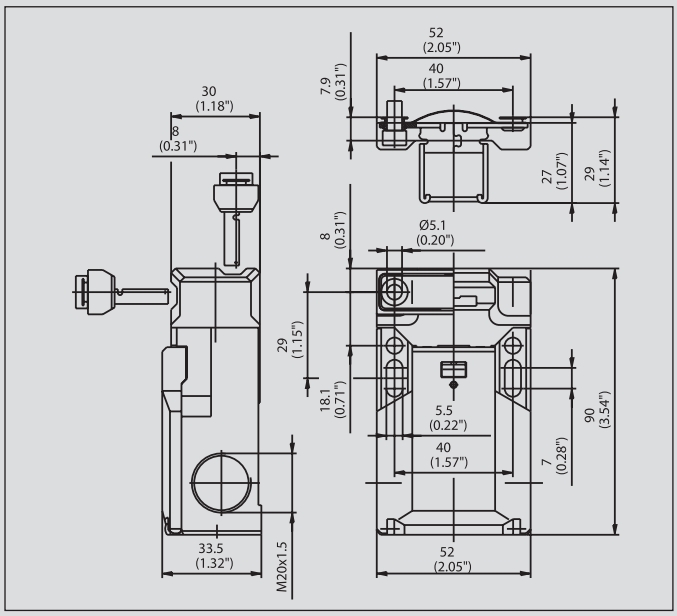

The SK safety position switch is an industry standard and can be used in virtually any application.

Thanks to design safety features conforming to VDE 0660 T200, IEC 60947-5-1 and the test regulations GS-ET 15, the SK is particularly suitable for personal protection applications. Its versatility is enhanced by the variable actuator head and two actuator openings.

Other decisive advantages include:

- **Different actuating forces:**

  Corresponding to your specific application, in addition to the standard 10 N, you can also choose an actuating force of 5, 20 or 30 N.

  Actuating forces from 30 to 100 N can be realised with the aid of additional components that are mounted on the outside of the switch.

- **Anti-tamper facility:**

  The switching system is protected by multiple coding to ensure enhanced safety of your application.

- **Outstanding handling:**

  With the two slots you can easily adjust the SK safety switch and lock it in position by means of the two holes accessible from the top or the two holes accessible from the front. The switch can be wired from three different sides. A transparent cover prevents foreign particles from entering the contact space while connecting the power supply cable.

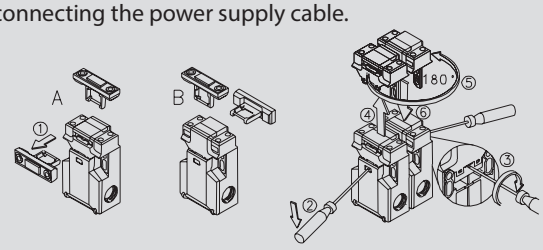

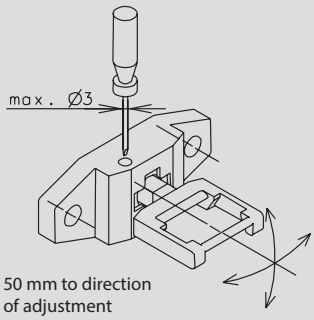

50 mm to direction
of adjustment
Actuator: metal

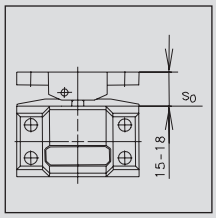

Technical data

Electrical data		
Rated insulation voltage (up to) ①	U_i max.	400 V AC
Rated operating voltage	U_e max.	240 V
Conventional thermal current (up to) ①	I_{the}	10 A
Utilization category		AC-15, U_e /I_e 240 V / 1.5 A
Mechanical data		
Switching frequency	≤ 30/min	
Mechanical service life	1 x 10^6 switching cycles	
B10d (bis zu) ①	2 Mill.	
Short-circuit protection (up to) ①	Fuse 10 A gL/gG	
Protection class	II, Insulated	
Ambient temperature	–30 °C ... + 80 °C	
Protection class	IP65 conforming to IEC/EN 60529	
Type of connection	Screw connections	
Conductor cross sections	Single-wire 0.5 – 1.5 mm^2 or Stranded wire with ferrule 0.5 – 1.5 mm^2	
Enclosure	Thermoplastic, glass fibre-reinforced (UL94-V0)	
Cable entry	3 x M20 x 1.5	
Standards		
VDE 0660 T100, DIN EN 60947-1, IEC 60947-1 VDE 0660 T200, DIN EN 60947-5-1, IEC 60947-5-1		

① Depending on switching system. See Table on Pages 72 – 75.

SKC

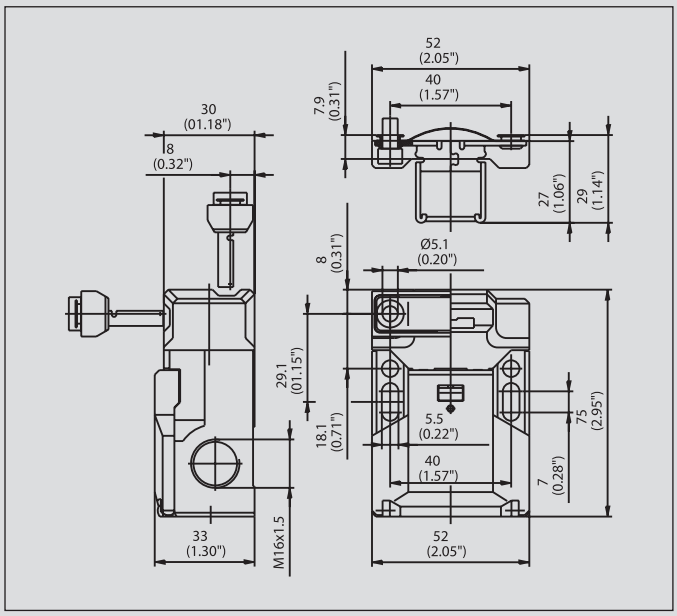

In terms of lengths, the SKC safety position switch is the 15 mm shorter variant of the SK. This makes it the right choice for confined installation conditions.

The SKC otherwise offers the same advantages as the SK: Industrial standard with particular emphasis on safety, personal protection and a variable actuator head with two actuator openings.

Other decisive advantages include:

- **Different actuating forces:**

  Corresponding to your specific application, in addition to the standard 10 N, you can also choose an actuating force of 5, 20, 30 or 50 N.

  Actuating forces from 30 to 100 N can be realised with the aid of additional components that are mounted on the outside of the switch.

- **Anti-tamper facility:**

  The switching system is protected by multiple coding to ensure enhanced safety of your application.

- **Outstanding handling:**

  With the two slots you can easily adjust the SKC safety switch and lock it in position by means of the two holes accessible from the top or the two holes accessible from the front. The switch can be wired from three different sides. A transparent cover prevents foreign particles from entering the contact space while connecting the power supply cable.

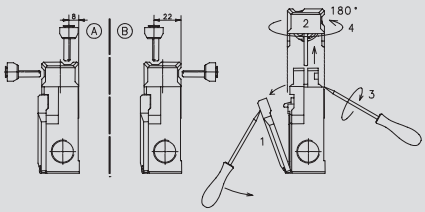

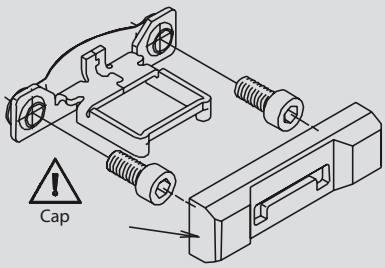

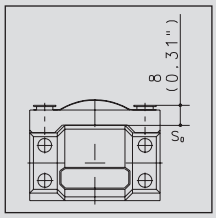

R_{min} 150 mm (5.9")
Actuator: Metal

Technical data

Electrical data		
Rated insulation voltage	U_i max.	250 V AC
Rated operating voltage	U_e max.	240 V
Conventional thermal current	I_{the}	5 A
Utilization category		AC-15, U_e /I_e 240 V / 1.5 A
Mechanical data		
Switching frequency	≤ 30/min.	
Mechanical service life	1 x 10^6 switching cycles	
B10d (up to) ①	2 Mill.	
Short-circuit protection	Fuse 6 A gL/gG	
Protection class	II, Insulated	
Ambient temperature	–30 °C ... + 80 °C	
Protection class	IP65 conforming to IEC/EN 60529	
Type of connection	Screw connections	
Conductor cross sections	Single-wire 0.5 – 1.5 mm^2 or Stranded wire with ferrule 0.5 – 1.5 mm^2	
Enclosure	Thermoplastic, glass fibre-reinforced (UL94-V0)	
Cable entry	3 x M16 x 1.5	
Standards		
VDE 0660 T100, DIN EN 60947-1, IEC 60947-1 VDE 0660 T200, DIN EN 60947-5-1, IEC 60947-5-1		

① Depending on switching system. See Table on Pages 72 – 75.

Safety Switches with Separate Actuator

	SKT	SKI
	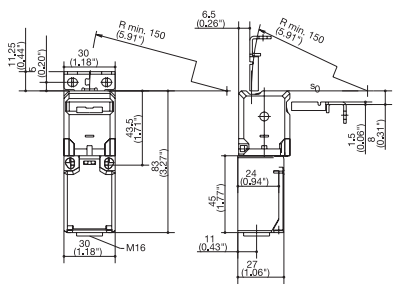	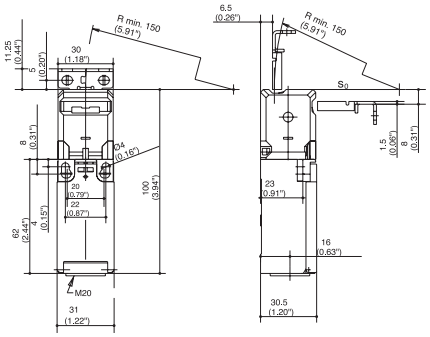

Switching operation	SKT Standard	SKT High actuating force	SKT Radius actuation	SKI Standard	SKI High actuating force	SKI Radius actuation
1 NC / 1 NO contact	**6016419059** SKT-U1Z M3			**6016819052** SKI-U1Z M3	**6016819139** SKI-U1Z FI50 M3	**6016819123** SKI-U1Z MRU
1 NC contacts						
2 NC contacts	**6016469066** SKT-A2Z M3			**6016869056** SKI-A2Z M3		**6016869122** SKI-A2Z MRU
2 NC / 1 NO contact Overlapping				**6016869058** SKI-UV15Z M3	**6016869145** SKI-UV15Z FI50 M3	**6016869131** SKI-UV15Z MRU
Approvals						

Special features / variants
(on request)

- Replacement actuator for:
  3112850340

Special features / variants
(on request)

- Replacement actuator for:

Standard	**3112850340**
High actuating force	**3112850340**
Radius actuation	**3911452058**

SKC

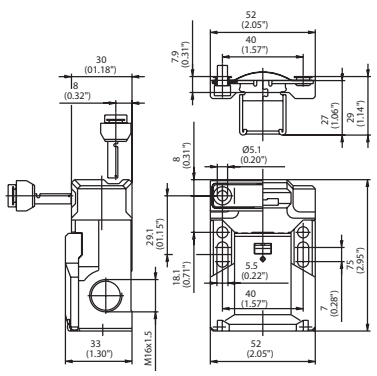

Standard	High actuating force	Radius actuation
6016169039 SKC-A1Z M	**6116169016** SKC-A1Z F30 M	**6016169087** SKC-A1Z MRU

SK

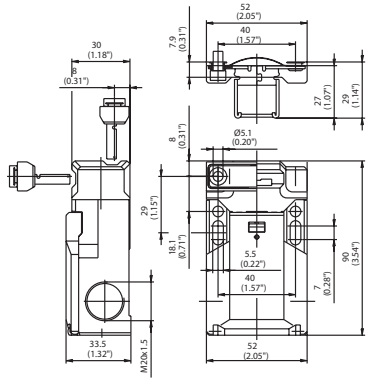

Standard	High actuating force	Radius actuation
6016119016 SK-U1Z M	**6116119109** SK-U1Z F30 M	**6016119084** SK-U1Z MRU
6016169036 SK-A2Z M	**6016169053** SK-A2Z F30 M	**6016169085** SK-A2Z MRU
6016169026 SK-UV15Z M	**6016169061** SK-UV15Z F30 M	**6016169086** SK-UV15Z MRU

Special features / variants
(on request)

- 50 N and 100 N actuating force on request
- Replacement actuator for:

Standard	**3911452116**
High actuating force	**3911451914**
Radius actuation	**3911452058**

Special features / variants
(on request)

- 100 N actuating force on request
- Replacement actuator for:

Standard	**3911452116**
High actuating force	**3911451914**
Radius actuation	**3911452058**

Safety Switches with Separate Actuator

Switch with VTU actuator

ENK-VTU

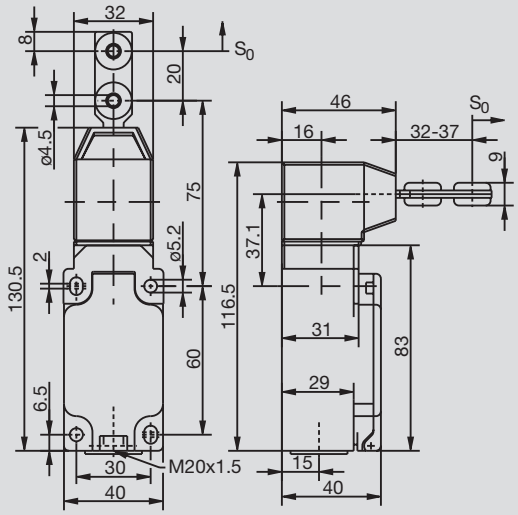

These position switches of the tried-and-tested switch familie ENK correspond to Type 2.

This results in many advantages:

- **Standardisation:**
  Switches of one family have the same mounting dimensions and the same electrical properties.
- **Reduced costs:**
  ENK is used in large quantities. This not only reflects the quality of the products but also means lower prices compared to special designs used in small quantities.

Variable VTU head

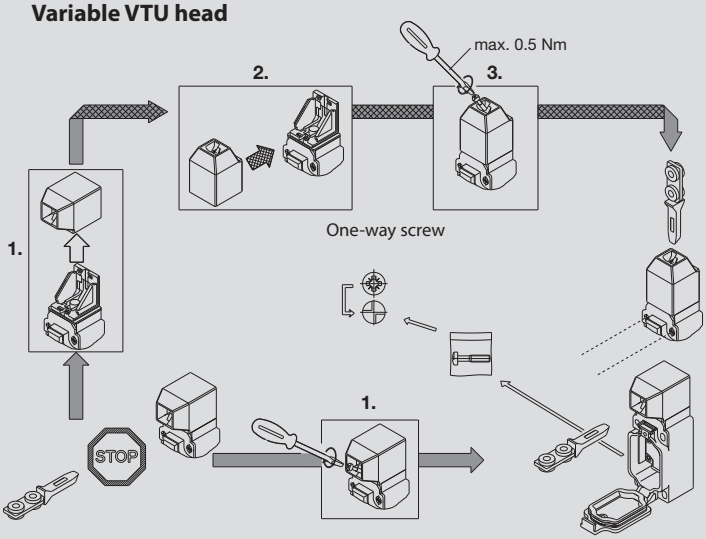

Repositioning the actuator head either in horizontal or vertical direction results in 8 approach actuator directions.

Technical data		ENK
Electrical data		
Rated insulation voltage	U_i	400 V AC
Conventional thermal current (up to) ①	I_{the}	10 A
Rated operating voltage	U_e	240 V
Utilization category (up to) ①		AC-15, U_e /I_e 240 V / 3 A
Forced disconnection	⊖	conforming to IEC/EN 60947-5-1, Addendum K
Short-circuit protection (up to) ①		Fuse 10 A gL/gG
Protection class		II, Insulated
Mechanical data		
Enclosure		Thermoplastic, glass fibre-reinforced
Cover		Thermoplastic, glass fibre-reinforced
Actuation		Separate actuator, (St/PA), Actuator (PA6 GV/Zn-GD)
Ambient temperature		–30°C to + 80°C
Mechanical service life		1 x 10^6 switching cycles
B10d		2 mill.
Switching frequency		max. 30/min.
Mounting		4 x M5
Type of connection		Screw connections
Conductor cross sections		Single-wire 0.5 – 1.5 mm^2 or Stranded wire with ferrule 0.5 – 1.5 mm^2
Cable entry		1 x M20 x 1.5
Weight		≈ 0.23 kg
Installation position		Any
Protection class		IP65 conforming to EN 60529
Standards		
VDE 0660 T100, DIN EN 60947-1, IEC 60947-1 VDE 0660 T200, DIN EN 60947-5-1, IEC 60947-5-1		

① Depending on switching system. See Table on Pages 72 – 75.

	ENK VTU	

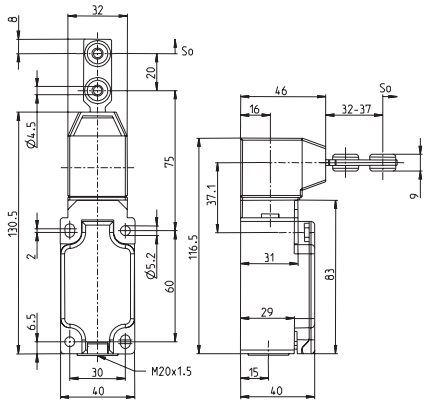

Switching operation	Standard	High actuating force	Radius actuation
1 NC / 1 NO contact	**6016619132** ENK-U1Z VTU		
2 NC contacts	**6016669133** ENK-A2Z VTU		
1 NC / 1 NO contact Overlapping	**6016669154** ENK-UV15Z VTU		
Approvals			

Replacement actuator: 3911702228

Special features / variants
(on request)

- All actuators specified under "Safety Switches with Separate Actuator and Latching Device (SLK)" can be used for these switches

Safety Switches with Separate Actuator and Interlock

SLK

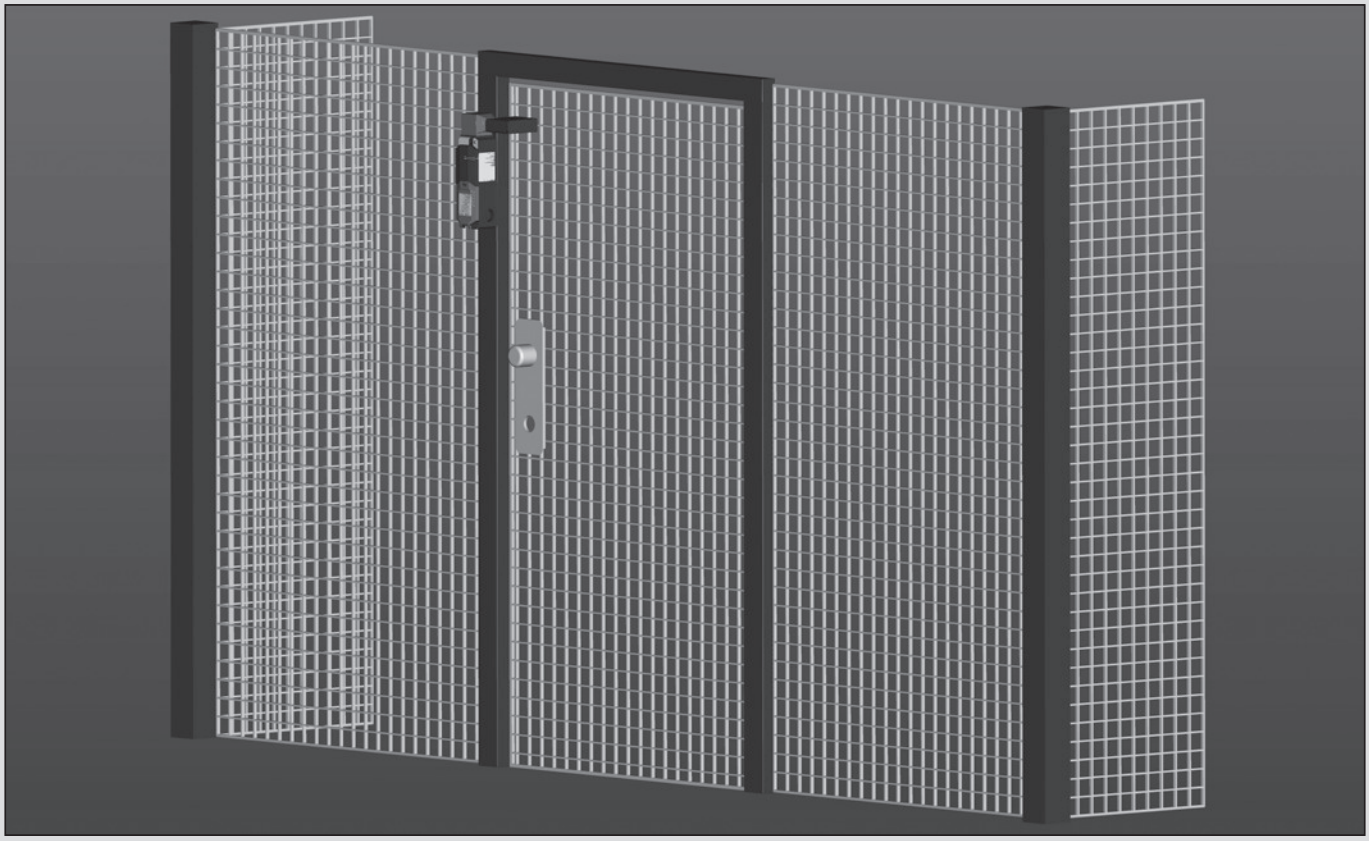

Machines that continue running after being switched off are often part of automated production processes. Safety guards prevent operator access and must therefore be kept closed until the hazards posed by machine movement have ceased.

Safety position switches with interlock function ensure that safety gates, safety doors and other protective guards remain closed for as long as a hazardous situation exists.

In production processes safety position switches have three main tasks:

- Enabling the machine / process when the safety guard is closed and interlocked
- Disabling the machine / process when the safety guard is opened
- Position monitoring of the safety guard and interlock

The SLK safety position switches with separate actuators and interlock enable the user to realise locking systems conforming to EN 1088, EN ISO 12100-1, 12100-2 and since 29.12.2009 to the compulsory Machinery Directive 2006/42/EC.

System description

SLK safety position switches with interlock function are available in versions with spring force locking action and magnetic force locking action. The separate actuator is connected formfit with the safety guard. It transfers the locking force to the safety guard and monitors its position. Thanks to its triple coding, the separate actuator ensures a high degree of antitamper security. The interlock facility in association with the SLK safety position switches is integrated in the switch enclosure. To lock the actuator in connection with a switching mechanism, the required interlock is achieved by means of a spring mechanism in the spring force locked version and by an electromagnet in the magnetic force locked version.

Locking principle

Spring force (closed-circuit current)

The interlock is activated when the actuator is fully inserted. The interlock is released by energising the electromagnet, allowing the safety guard to be opened.

Magnetic force (working current)

The interlock is deactivated when the electromagnet is de-energised in the event of a power failure. This allows the safety guard to be opened.

Product advantages

- Two independent safety circuits ensure reliable integration
  - With two contacts, circuit 1 monitors the actuator
  - With two contacts, circuit 2 monitors the interlock

    The contact configuration is variable and may deviate from the selection table if required.
- Two different operating voltages for universal integration:
  - 24 V AC / DC
  - 110 V / 230 V AC
- Rotary actuating head (4x 90°) as well as horizontal and vertical actuation ensure complete flexibility in use
- Compact design with short overall size of only 170 mm
- Innovative installation with spring-loaded terminals
- Function conforming to GS ET 19, EN 60 204-1, EN 60 947-1 and EN 60 947-5-1

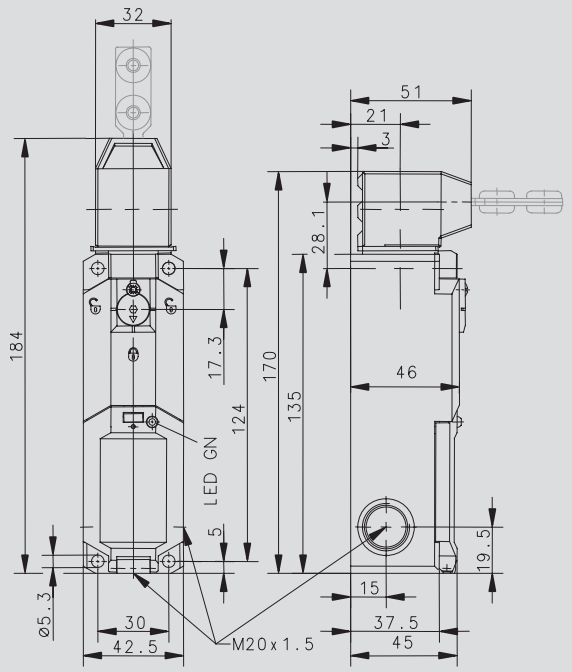

The actuator is not included and must be ordered separately.

Safe operation

The stainless steel actuator ensures safe and reliable operation. Its coding prevents tampering and bypassing the system "in an easier way". The radius actuator is ideal for monitoring smaller safety gates. It can be preset horizontally or vertically and is also made from stainless steel.

Flexible in use

The SLK safety switch can be actuated in a horizontal and vertical direction. Prior to installation it is preset by simply repositioning the head section. This flexibility in installation is achieved by positioning the actuator head in steps of 4 x 90°.

New symbol according to ISO 14119 for the interlocking contact:

Contacts labelled with this symbol in the switching travel diagram in the operating and installation instructions are safely positively driven contacts which monitor the interlocking position.

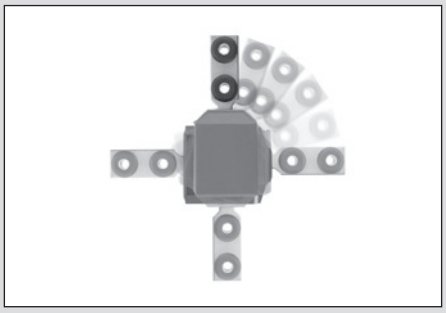

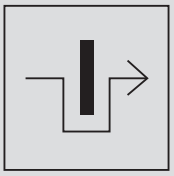

Innovative installation

The SLK is electrically connected safely and reliably by means of terminals. Spring loaded terminals are used, into which the wires with ferrules can be inserted without the need for tools. The fact that the connection compartment is separate from the functional parts contributes to ensuring secure and reliable connection. The connection compartment conforms to protection class IP67.

IMPORTANT: The actuator for the SLK must be ordered separately. You will find a corresponding overview on Pages 92 – 93.

Safety Switches with Separate Actuator and Interlock

SLK

Product selection

Article number	Designation	Locking action	Supply voltage	Contacts Actuator	Interlock	Additional function
6018119045	SLK-F-UC-55-R1-A0-L0-0	Spring	24 Volt AC / DC	1NC / 1NO	1NC / 1NO	Auxiliary release
6018119066	SLK-F-UC-55-R1-A0-L1-0	Spring	24 Volt AC / DC	1NC / 1NO	1NC / 1NO	Auxiliary release, LED
6018169054	SLK-F-UC-22-R1-A0-L0-0	Spring	24 Volt AC / DC	2 NC	2 NC	Auxiliary release
6018169050	SLK-F-UC-25-R1-A0-L0-0	Spring	24 Volt AC / DC	2 NC	1NC / 1NO	Auxiliary release
6018169068	SLK-F-UC-25-R1-A0-L1-0	Spring	24 Volt AC / DC	2 NC	1NC / 1NO	Auxiliary release, LED
6018119061	SLK-F-UC-55-R2-A0-L0-0	Spring	24 Volt AC / DC	1NC / 1NO	1NC / 1NO	Emergency release
6018119046	SLK-F-NC-55-R1-A0-L0-0	Spring	110 / 230 AC	1NC / 1NO	1NC / 1NO	Auxiliary release
6018119067	SLK-F-NC-55-R1-A0-L1-0	Spring	110 / 230 AC	1NC / 1NO	1NC / 1NO	Auxiliary release, LED
6018169069	SLK-F-NC-25-R1-A0-L1-0	Spring	110 / 230 AC	2 NC	1NC / 1NO	Auxiliary release, LED
6018119047	SLK-M-UC-55-R0-A0-L0-0	Magnet	24 Volt AC / DC	1NC / 1NO	1NC / 1NO	
6018169052	SLK-M-UC-25-R0-A0-L0-0	Magnet	24 Volt AC / DC	2 NC	1NC / 1NO	
6018169056	SLK-M-UC-22-R0-A0-L0-0	Magnet	24 Volt AC / DC	2 NC	2 NC	
6018119048	SLK-M-NC-55-R0-A0-L0-0	Magnet	110 / 230 AC	1NC / 1NO	1NC / 1NO	

Technical data		Spring 24 Volt AC / DC	Spring 110 / 230 AC	Magnet 24 Volt AC / DC	Magnet 110 / 230 AC
Electrical data					
Rated insulation voltage	U_i	250 V	250 V	250 V	250 V
Utilization category		AC-15, U_e /I_e 230 V / 2.5 A	AC-15, U_e /I_e 230 V / 2.5 A	AC-15, U_e /I_e 230 V / 2.5 A	AC-15, U_e /I_e 230 V / 2.5 A
Conventional thermal current	I_{the}	5 A	5 A	5 A	5 A
Short-circuit protection		4 A gL	4 A gL	4 A gL	4 A gL
Protection class		II, Insulated	II, Insulated	II, Insulated	II, Insulated
Electromagnet					
Duty factor		100 % ED (an E1; E2)	100 % ED (an E1; E2)	100 % ED (an E1; E2)	100 % ED (an E1; E2)
Thermal class		F (155 °C)	F (155 °C)	F (155 °C)	F (155 °C)
Switch-on power		12 VA (0.2 s)	65 VA (0.1 s)	12 VA (0.2 s)	65 VA (0.1 s)
Continuous power		4.4 VA	8 VA	4.4 VA	8 VA
Mechanical data					
Enclosure		Thermoplastic GV (UL94-V0)	Thermoplastic GV (UL94-V0)	Thermoplastic GV (UL94-V0)	Thermoplastic GV (UL94-V0)
Cover		Thermoplastic GV (UL94-V0)	Thermoplastic GV (UL94-V0)	Thermoplastic GV (UL94-V0)	Thermoplastic GV (UL94-V0)
Actuator		Thermoplastic GV / Zn-GD	Thermoplastic GV / Zn-GD	Thermoplastic GV / Zn-GD	Thermoplastic GV / Zn-GD
Ambient temperature		–25 °C to + 70 °C	–25 °C to + 70 °C	–25 °C to + 70 °C	–25 °C to + 70 °C
Switching function		2 NC contacts, 2 NO contacts	2 NC contacts, 2 NO contacts	4 NC contacts	2 NC contacts, 2 NO contacts
Switching principle		4 Slow-action contacts	4 Slow-action contacts	4 Slow-action contacts	4 Slow-action contacts
Mechanical service life		1 x 10^6 switching cycles (max. 600 switching cycles / h)	1 x 10^6 switching cycles (max. 600 switching cycles / h)	1 x 10^6 switching cycles (max. 600 switching cycles / h)	1 x 10^6 switching cycles (max. 600 switching cycles / h)
B10d		2 mill.	2 mill.	2 mill.	2 mill.
Minimum actuating radius	R_{min}	See datasheet, actuator	See datasheet, actuator	See datasheet, actuator	See datasheet, actuator
Approach speed	V_{max}	0.5 $^m/_s$	0.5 $^m/_s$	0.5 $^m/_s$	0.5 $^m/_s$
Mounting		4 x M5	4 x M5	4 x M5	4 x M5
Cross sections		0.5 – 1.5 mm^2	0.5 – 1.5 mm^2	0.5 – 1.5 mm^2	0.5 – 1.5 mm^2
Type of connection		Cage clamp terminal	Cage clamp terminal	Cage clamp terminal	Cage clamp terminal
Cable entry		3 x M20 x 1.5	3 x M20 x 1.5	3 x M20 x 1.5	3 x M20 x 1.5
Weight		≈ 0.34 kg	≈ 0.30 kg	≈ 0.30 kg	≈ 0.35 kg
Protection class		IP67 conforming to IEC/EN 60529	IP67 conforming to IEC/EN 60529	IP67 conforming to IEC/EN 60529	IP67 conforming to IEC/EN 60529
Installation position		Any	Any	Any	Any
Locking principle		Spring force	Spring force	Magnetic force	Magnetic force
Latching force	FZh	≤ 1500 N to GS-ET-19	≤ 1500 N to GS-ET-19	≤ 1500 N to GS-ET-19	≤ 1500 N to GS-ET-19

Approvals:

Notes

Safety Switches with Separate Actuator and Interlock

Product selection SLK, ENK-VTU, ENM2-VTW

Article number	Designation
3911702228	Actuator A1

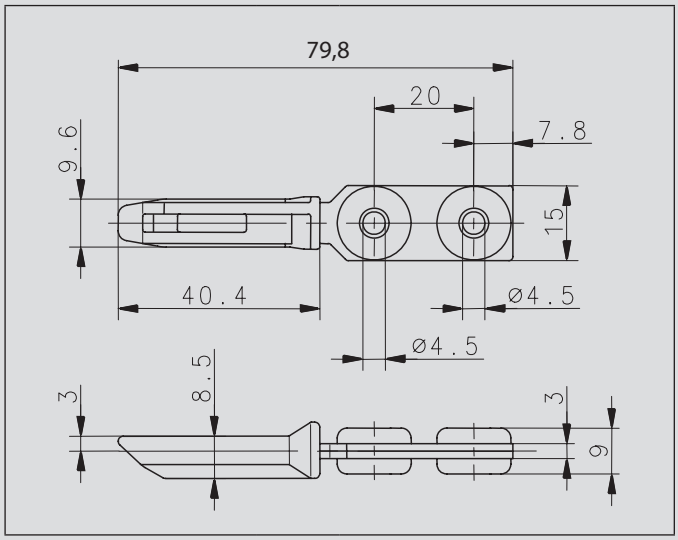

Mechanical data		
Actuator		Steel/PA
Minimum actuating radius	R_{min}	400 mm

Article number	Designation
3911702231	Actuator A4

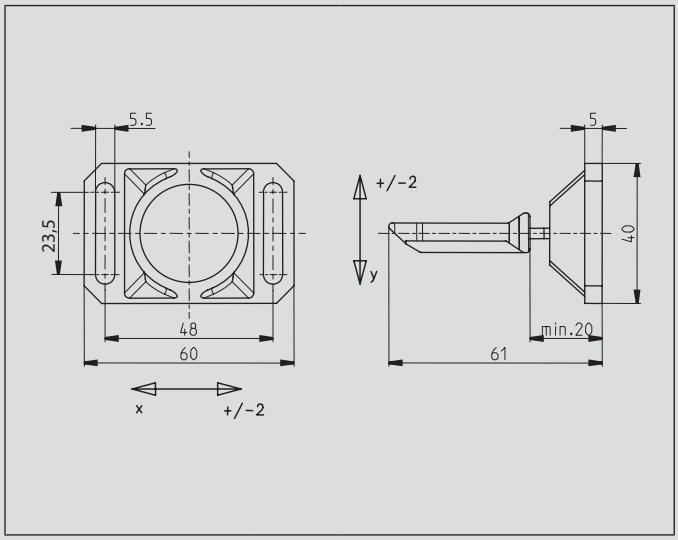

Mechanical data		
Actuator		Steel/PA
Enclosure		GD-Zn
Minimum actuating radius	R_{min}	350 mm
Repositioning of spring-mounted actuator by 4 x 90° in mounted state.		

Article number	Designation
3911702229	Actuator A2

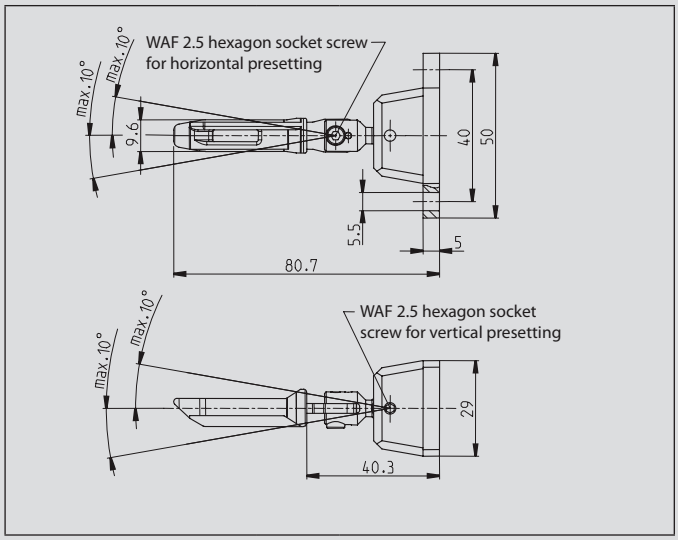

Mechanical data		
Enclosure / Actuator		Steel/PA
Minimum actuating radius	R_{min}	150 mm
Repositioning of spring-mounted actuator by 4 x 90° in not mounted state.		
WAF 2.5 Allen key, supplied		

Article number	Designation
3911702230	Actuator A3

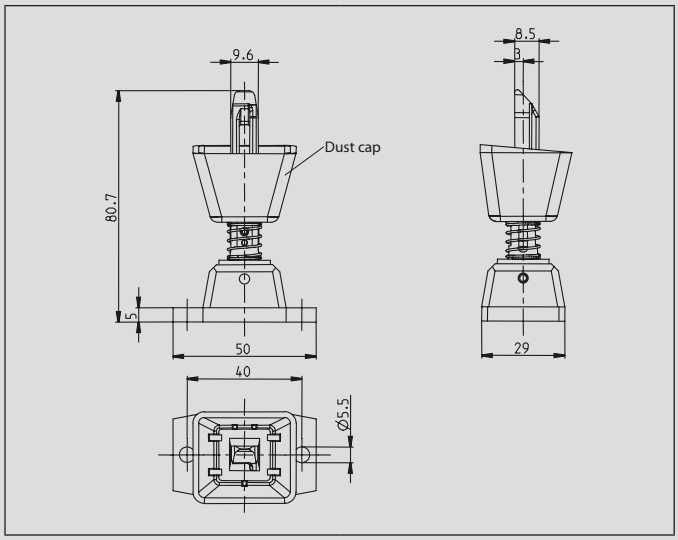

Mechanical data		
Enclosure / Actuator		Steel/PA
Dust cap		Elastomer CR
Minimum actuating radius	R_{min}	400 mm
Repositioning of spring-mounted actuator by 4 x 90° in not mounted state.		

Article number	Designation
3911702234	Actuator A7

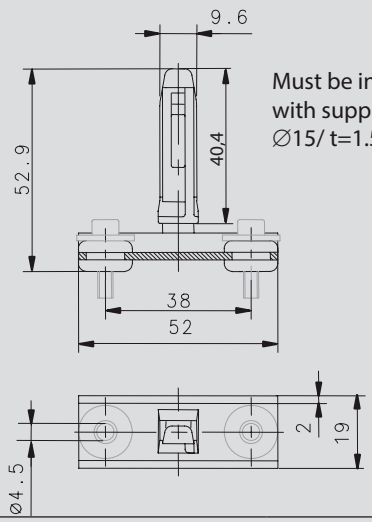

Must be installed
with supplied washers
∅15/ t=1.5 / ∅4.3!

Mechanical data		
Actuator		Steel/PA
U-section		Steel
Minimum actuating radius	R_{min}	400 mm

Safety Switches for Hinged Protective Equipment

Safety Hinge Switch – SHS3

With the SHS3 safety hinge switch we present the logical further development of the SHS series and a solution that makes it unnecessary to replace the safety hinge switch when equipment such as safety gates are damaged as the result of mechanical stress, such as after being bumped by a forklift truck for instance. Even after the switching point has been set, if need be, the user can now correct the hinge setting with the aid of the integrated fine adjustment system. The SHS3 hinge switch is reusable even when the entire system needs to be converted: With the aid of a change kit, the user can redefine the switching point without using the high protection rating of IP67 / IP69 K.

The SHS3 has a swivel range from 0° to 270°. The switching point is also freely selectable within this range.

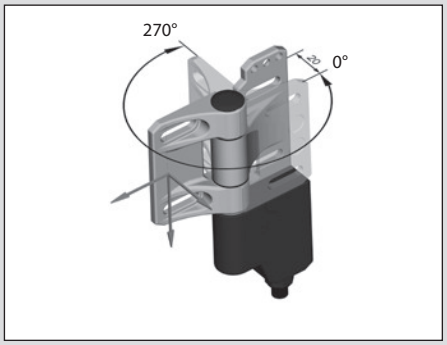

The SHS3 hinge switch has virtually no limits in terms of its installation flexibility. Not only does the SHS3 enable front and interior installation, right-hinged or left-hinged mounting or freely selectable direction of electric connection, but thanks to the switching point which can be set in an angle range of 270°, this hinge switch can also be installed in places that were previously not possible.

Safe:

With suitable system layout, the switch can be used up to performance level e. Following variants are available:

- 2 positive opening safety contacts
- 2 positive opening safety contacts with additional normally-open signalling contact
- With integrated AS interface Safety at Work.

Flexible:

- Freely and repeatedly adjustable switching point
- Switching point freely adjustable by user over a range of 270°
- Uncomplicated re-adjustment even of set switching point by ±1.5° thanks to integrated fine adjustment system
- Slots for mounting on sections and welded structures
- In addition to the plug connection version, an SHS with fixed cable connection at the rear is also available
- Right and left hinged systems possible for optimum cable routing
- Mounting between sections while maintaining the required finger guard gap

Fast:

To connect the SHS3 even more efficiently, the two contacts are designed as normally-closed contacts with Ultra-Lock technology, thus enabling connection with an M12 cable.

Reliable:

- The protection rating is IP67 / IP69 K
- The load-bearing hinge is made from stainless steel while the switching system is housed in a high quality plastic enclosure

Double hinge

Thanks to its two switching elements on one hinge, the BG (occupational health and safety)-approved variant of the SHS3 provides two independently adjustable switching points. This arrangement not only makes it possible to monitor the opening of a safety guard but also the direction of opening of swing doors.

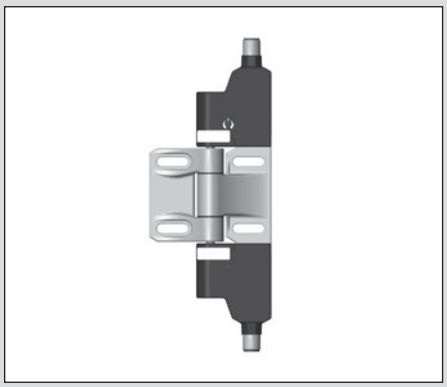

SHS3 – Setting the switching point

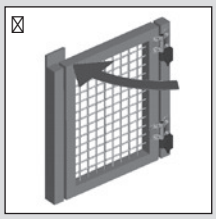
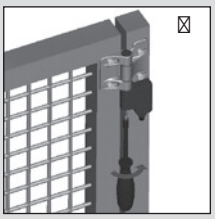
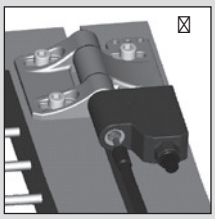
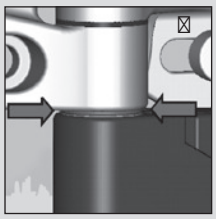
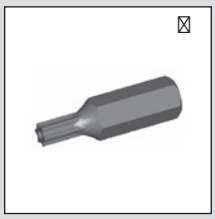
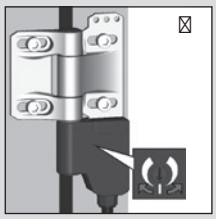

On delivery, the SHS3 hinge switch allows for all possible settings. With your specific application you define and lock the safe status of the hinged safety equipment (the closed position) (Fig. 1).

The adjusting screw located in axial direction in the switching system is then tightened with the special bit supplied with the hinge switch. The arrangement of the adjusting screw makes it possible to adjust the switching point in all installation positions (Fig. 2+3)

After establishing a form-fit connection, a green ring in the gap between the stainless steel hinge and switch enclosure indicates that the switching point has been set correctly at a min. torque of 2 Nm/+10% (Fig. 4).

A red ring at this point additionally indicates wear, e.g. caused by abrasive substances. With the same special bit you can not only freely adjust the switching point to suit your application but you can also change the mounting arrangement of your safety equipment from right-hinged to left-hinged (Fig. 5).

Fine adjustment

The set switching point can be subsequently varied by up to ±1.5% by turning the adjusting screw in the corresponding direction (Fig. 6).

In many cases this fine adjustment makes it unnecessary to replace the switch or readjust the switching point due to mechanical deformation of the safety guard. The switching angle should generally be selected as small as possible.

Dimensioned drawings

SHS3…KA…

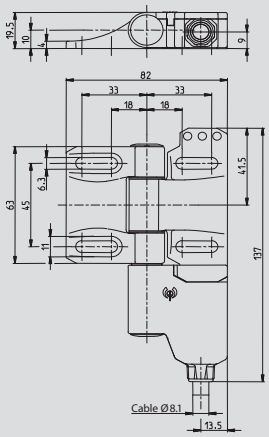

SHS3…KR…

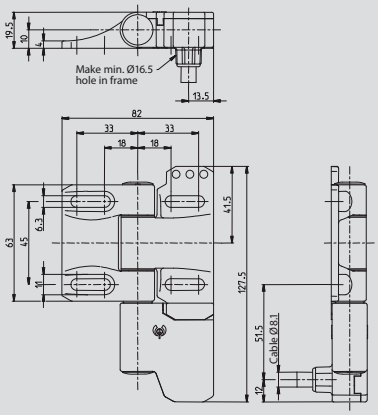

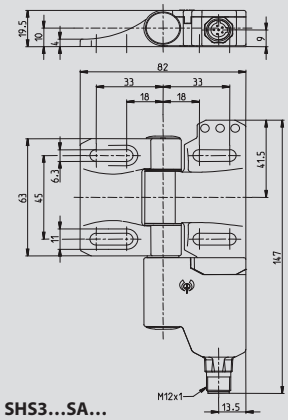

SHS3…SA…

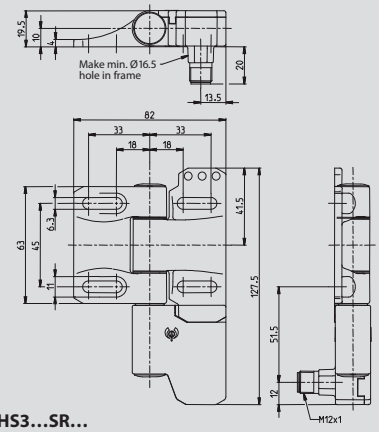

SHS3…SR…

Switching diagram

U15Z
2 NC contacts,
1 NO contacts (Zb)

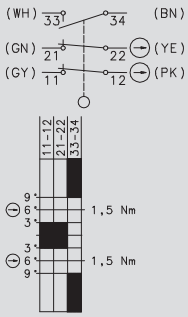

A2Z
2 NC contacts (Zb)

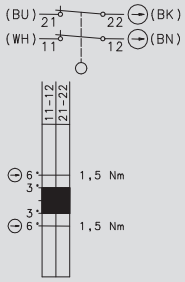

Setting point freely selectable in range from 0°... 270° and 0°…180°

Tolerances:

Switching angle (opening) ± 1.5°
Positive opening torque 10 %
Positive opening angle ± 1.5°

Safety Switches for Hinged Protective Equipment

Product selection for die-cast zinc version

Article number	Designation	Switching contact	Max. switching voltage	Type of voltage	Type of connection and direction radial	axial	Required cable coupling / type	Mounting
6019490050	SHS3Z-U15Z-KA5 R	2NC/1NO	230 V	AC/DC		Cable		Right
6019490051	SHS3Z-U15Z-KA5 L	2NC/1NO	230 V	AC/DC		Cable		Left
6019490052	SHS3Z-U15Z-KR5 R	2NC/1NO	230 V	AC/DC	Cable			Right
6019490053	SHS3Z-U15Z-KR5 L	2NC/1NO	230 V	AC/DC	Cable			Left
6019490054	SHS3Z-U15Z-SA R	2NC/1NO	230 V	AC/DC		M12	D	Right
6019490055	SHS3Z-U15Z-SA L	2NC/1NO	230 V	AC/DC		M12	D	Left
6019490056	SHS3Z-U15Z-SR R	2NC/1NO	230 V	AC/DC	M12		D	Right
6019490063	SHS3Z-U15Z-SR L	2NC/1NO	230 V	AC/DC	M12		D	Left
6019490057	SHS3Z-U1Z-SA R	1NC/1NO	230 V	AC/DC		M12	E	Right
6019490058	SHS3Z-U1Z-SA L	1NC/1NO	230 V	AC/DC		M12	E	Left
6019490059	SHS3Z-U1Z-SR R	1NC/1NO	230 V	AC/DC	M12		E	Right
6019490060	SHS3Z-A2Z-SA R	2NC	230 V	AC/DC		M12	E	Right
6019490061	SHS3Z-A2Z-SA L	2NC	230 V	AC/DC		M12	E	Left
6019490062	SHS3Z-A2Z-SR R	2NC	230 V	AC/DC	M12		E	Right
6019490049	SHS3Z-HINGE							

Product selection for stainless steel version

Article number	Designation	Switching contact	Max. switching voltage	Type of voltage	Type of connection and direction radial	axial	Required cable coupling / type	Mounting
6019390023	SHS3-U15Z-KA 5 L	2NC/1NO	230 V	AC/DC		Cable		Left
6019390022	SHS3-U15Z-KA 5 R	2NC/1NO	230 V	AC/DC		Cable		Right
6019390025	SHS3-U15Z-KR 5 L	2NC/1NO	230 V	AC/DC	Cable			Left
6019390024	SHS3-U15Z-KR 5 R	2NC/1NO	230 V	AC/DC	Cable			Right
6019390035	SHS3-U15Z-SA L	2NC/1NO	230 V	AC/DC		M12	D	Left
6019390034	SHS3-U15Z-SA R	2NC/1NO	230 V	AC/DC		M12	D	Right
6019390037	SHS3-U15Z-SR L	2NC/1NO	230 V	AC/DC	M12		D	Left
6019390036	SHS3-U15Z-SR R	2NC/1NO	230 V	AC/DC	M12		D	Right
6019390040	SHS3-A2Z-SA-R	2NC	230 V	AC/DC		M12	E	Right
6019390041	SHS3-A2Z-SA-L	2NC	230 V	AC/DC		M12	E	Left
6019390044	SHS3-A2Z-SR-R	2NC	230 V	AC/DC	M12		E	Right
6019390042	SHS3-U1Z-SA-R	1NC/1NO	230 V	AC/DC		M12	E	Right
6019390043	SHS3-U1Z-SA-L	1NC/1NO	230 V	AC/DC		M12	E	Left
6019390045	SHS3-U1Z-SR-R	1NC/1NO	230 V	AC/DC	M12		E	Right
6019390046	SHS3-2-SA/2-SA	2 x 2NC	230 V	AC/DC		M12	2 x E	Both sides
6019390047	SHS3-5-SA/5-SA	2 x 1NC/1NO	230 V	AC/DC		M12	2 x E	Both sides
6019390048	SHS3-7-KA5/7-KA5	2 x 2NC/1NO	230 V	AC/DC		Cable		Both sides
6019390039	SHS3-7-SA/7-SA	2 x 2NC/1NO	230 V	AC/DC		M12	2 x D	Both sides
6019390038	SHS3-HINGE (blank hinge)							Both sides

Product selection for stainless steel version in IP69

Article number	Designation	Switching contact	Max. switching voltage	Type of voltage	Type of connection and direction radial	axial	Required cable coupling / type	Mounting
6019390064	SHS3-U15Z-KA5-R-IPX	2NC/1NO	230 V	AC/DC		Cable		Right
6019390065	SHS3-U15Z-KA5-L-IPX	2NC/1NO	230 V	AC/DC		Cable		Left
6019390066	SHS3-U15Z-KR5-R-IPX	2NC/1NO	230 V	AC/DC	Cable			Right
6019390067	SHS3-U15Z-KR5-L-IPX	2NC/1NO	230 V	AC/DC	Cable			Left
6019390068	SHS3-7-KA5-IPX/7-KA5-IPX	2 x 2NC/1NO	230 V	AC/DC		Cable		Both sides

Technical data SHS3

Electrical data		
Rated insulation voltage	U_i max.	250 V
Rated operating voltage	U_e max.	230 V AC; 24 V DC
Conventional thermal current	I_{the}	5 A
Utilization category	U_e /I_e	AC-15, U_e /I_e 230 V / 3 A; DC-13 U_e /I_e 24 V/1A
Short-circuit protection		4 A gL/gG
Protection class		II, Insulated

Mechanical data	
Switch	PBT / Hinge G-X22 Cr Ni 17
Ambient temperature	–25°C to + 70°C (Connection cable installed)
Mechanical service life	10^6 switching cycles
Switching frequency max.	max. 300 switching cycles/hour
Mounting	4 x M6 Screws DIN EN ISO 7984
B10d	2 mill.
Type of connection	Fixed connection cable, 6 x 0.75 mm^2, minimum bending radius = 60 mm
Weight	approx. 0.7 kg (cable variant)
Installation position	Any
Protection class	IP67 conforming to IEC/EN 60529
Switching angle	± 3° from setting point
Positive opening angle	± 6° + 2
Positive opening torque	1.5 Nm
Mechanical load	F_{R1} = max. 1800 N, F_{R2} = max. 750 N, F_A = max. 1800 N

Standards
VDE 0660 T100, DIN EN 60947-1, IEC 60947-1 VDE 0660 T200, DIN EN 60947-5-1, IEC 60947-5-1

Safety Switches for Hinged Protective Equipment

SHS3 Cable Type D

Article number	Designation	Cable length	Connector type	Number of pins	Special feature
3251006291	AN-KAB.SHS3 2M STRAIGHT	2 m	Straight	6	M12 BG version
3251006292	AN-KAB.SHS3 5M STRAIGHT	5 m	Straight	6	M12 BG version
3251006293	AN-KAB.SHS3 10M STRAIGHT	10 m	Straight	6	M12 BG version
3251006294	AN-KAB.SHS3 2M ELBOW	2 m	Elbow	6	M12 BG version
3251006295	AN-KAB.SHS3 5M ELBOW	5 m	Elbow	6	M12 BG version
3251006296	AN-KAB.SHS3 10M ELBOW	10 m	Elbow	6	M12 BG version

Contact assignments, AC/DC versions

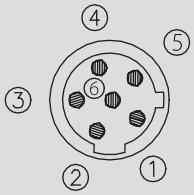

1 = White
2 = Brown
3 = Green
4 = Yellow
5 = Grey
6 = Pink

Core insulation/sheathing material:	PVC (∅ 5.6 mm)
Moulding/contact carrier material:	PUR Elastollan R3000
Max. rated voltage:	250 V AC
Max. current carrying capacity:	2.5 A (at 70 °C)
Min./max. temperature range:	–5 °C to + 105 °C (moved)
	–40 °C to + 105 °C (moved firmly)
Cable configuration mm^2:	LiYwUL2517 6 x 0.34
Protection class when assembled:	IP68

SHS3 Cable Type E

Article number	Designation	Cable length	Connector type	Number of pins	Special feature
3251004310	AN-KAB.SHS3 4P 2M STRAIGHT	2 m	Straight	4	M12 BG version
3251004311	AN-KAB.SHS3 4P 5M STRAIGHT	5 m	Straight	4	M12 BG version
3251004312	AN-KAB.SHS3 4P 10M STRAIGHT	10 m	Straight	4	M12 BG version
3251004313	AN-KAB.SHS3 4P 2M ELBOW	2 m	Elbow	4	M12 BG version
3251004314	AN-KAB.SHS3 4P 5M ELBOW	5 m	Elbow	4	M12 BG version
3251004315	AN-KAB.SHS3 4P 10M ELBOW	10 m	Elbow	4	M12 BG version

Contact assignments, AC/DC versions

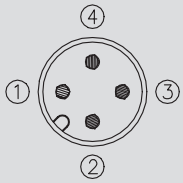

1 = Brown
2 = White
3 = Blue
4 = Black

Core insulation / sheathing material:	Heat resistant PVC UL 1731 / UL 2517 black
Moulding/contact carrier material:	APEX 7500-85 / R3000 Elastollan R3000 neutral
Max. rated voltage:	250 V
Max. current carrying capacity:	4 A
Min. / max. temperature range:	At rest –25 °C to + 105 °C
	Moved –5 °C to + 105 °C
Protection class when assembled:	IP68

Change kit for re-adjusting switching point

Article number	Designation
3991990161	SHS3 change kit
Containing:	
2 replacement caps	
1 special bit	
1 plastic ring	

Installation tool

Article number	Designation
1910000005	Bit holder 1/4" flexible stem

Notes

Safety Switches for Hinged Protective Equipment

Safety Hinge Switch – SHS

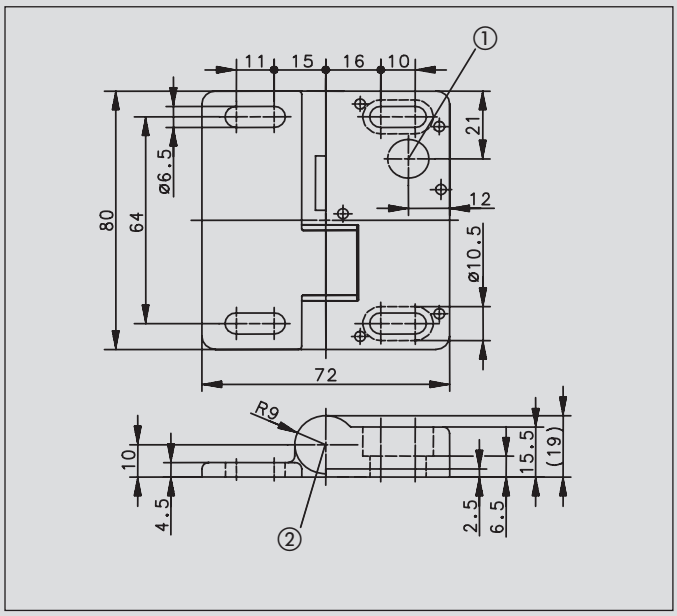

Illustration showing fixed pin and shearing bolt sheared off

- Position of connection variant 2, 5 and 6.
- Position of connection variant 1, 3 and 4.

Protective hoods and safety guards on machines such as gates in safety gate systems are often pivot mounted with hinges.

Since BERNSTEIN presented the world's first safety hinge switch SHS in 2002 it is hard to imagine modern production installations without it. It combines a hinge and safety switch in one single functional unit.

The design of the SHS safety hinge switch has been optimised to allow its effective use on aluminium section systems. Its shallow depth, even when fully opened, makes it ideally suited for use in constricted installation conditions on machines. Safety switches with separate actuators are often subjected to high mechanical stresses, especially when they are mounted on closing edges. The SHS hinge switch sets new standards. The safety guard is monitored directly in the hinge.

The concealed arrangement of the safety switch provides a high degree of protection against tampering. One or several SHS switches are be used depending on control requirements.

In many applications the conventional load bearing hinge can be replaced by a blank hinge with identical design features as the safety hinge. This has significant rationalisation benefits. The only parameter you need to take into account is the maximum extension of the hinged safety equipment that results from the switching angle and the permissible safe opening in the area of the closing edges. The SHS hinge switch provides maximum anti-tamper protection as, once set, the switching point can no longer be changed.

Safe:

- 2 SHS hinge switches, each equipped with a positively opening safety contact, allows you to configure a system up to performance level e

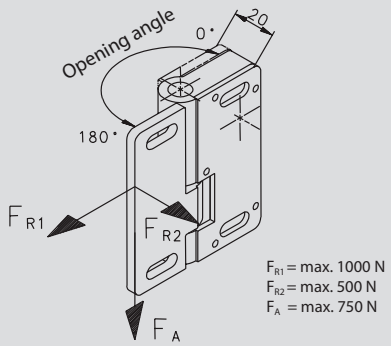

Flexible:

- The angle range extends from 0 to 225°
- A safety device ensures positive locking after the switch has been set
- In addition to the plug connection version, an SHS with fixed cable connection at the rear is also available

Fast:

- Plug connector and fixed cable connections are available for axial and radial (rear) connection
- An AC/DC version (up to 250 V) or a DC version (up to 60 V) is available, depending on the configuration of the safety circuit

Reliable:

- A pressure die-cast zinc enclosure allows versatile use of the SHS switch in varied applications
- When used as a load bearing hinge, the SHS takes up loads of up to 750 N in axial direction and 1000 N in radial direction after the switching point has been finally set
- The protection rating is IP67

Switching diagram

1 NC contact (Type B)

1 Changeover contact (Type C)

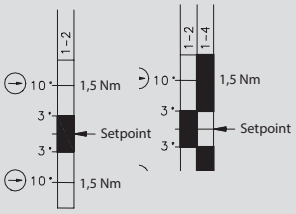

Setting point freely selectable in range from 0°... 225°

Tolerances:
Switching angle (opening) +2.0°/–1.5°
Positive opening torque 10 %
Positive opening angle +0.5°/–3°

Switching angle hysteresis (closing of normally-closed contact –1.0°) from typical hinge switch-off point

Connection drawing

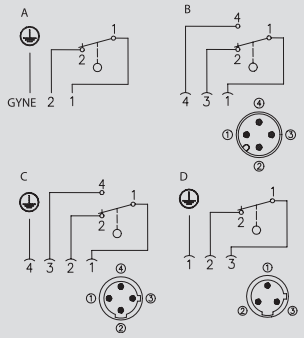

Connection variant 1

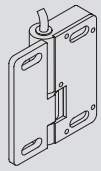

Cable, PVC

Connection variant 2

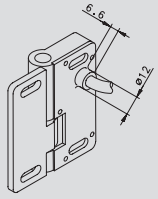

Cable, PVC

Connection variant 3

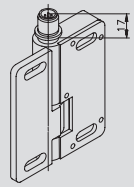

Connector M12 x 1, metal thread

Connection variant 4

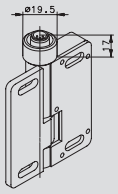

Connector M12 x 1, metal thread with anti-tamper facility

Connection variant 5

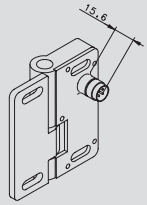

Connector M12 x 1

Connection variant 6

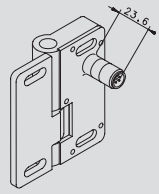

Connector M12 x 1

Product selection

Article number	Designation	Switching contact	Max. switching voltage	Type of voltage	Connection variant radial	Connection variant number	Connection variant axial	Required cable coupling / type	Remarks
6019261011	SHS-A1Z-KA 5	1NC	230 V	AC/DC		1	Cable		BG approval
6019261014	SHS-A1Z-KR 5	1NC	230 V	AC/DC	Cable	2			BG approval
6019261017	SHS-A1Z-SA-BG	1NC	230 V	AC/DC		4	M12	A	BG approval
6019261018	SHS-A1Z-SR-BG	1NC	230 V	AC/DC	M12	6		A	BG approval
6019261009	SHS-A1Z-SA	1 Changeover contact	230 V	AC/DC		3	M12	C	
6019261010	SHS-A1Z-SR	1 Changeover contact	60 V	DC	M12	5		B	
6019261015	SHS-A1Z-SA	1 Changeover contact	60 V	DC		3	M12	B	
6019261016	SHS-A1Z-SR	1 Changeover contact	230 V	AC/DC	M12	6		C	
6019291013	SHS-0Z								Blank hinge

Technical data

Electrical data		
Rated insulation voltage	U_i	250 V
Rated surge voltage strength	U_{imp}	2.5 kV
Thermal current	I_{the}	3 A
Rated operating voltage	U_e	230 V AC; 60 V DC
Utilization category		AC-15, 230 V AC/1.5 A;
Positive opening	⊕	conforming to IEC/EN 60947-5-1, Addendum K
Short-circuit protection		Fuse 4 A gL/gG
Mechanical data		
Switch	GD-Zn	
Ambient temperature	–25°C to + 70°C (Connection cable installed)	
Mechanical service life	10^6 switching cycles	
B10d	2 mill.	
Switching frequency	max. 1200 switching cycles/hour	
Mounting	4x M6 screws DIN 7984 or DIN 6912	
Type of connection	Fixed connection cable, 3 x 0.5 mm^2 x 5 m (AWG20), minimum bending radius = 25 mm	
Weight	approx. 0.7 kg (cable variant) approx. 0.4 kg (connector and blank hinge variant)	
Installation position	Any	
Protection class	IP67 as per IEC/EN 60529	
Switching angle	± 3° from setting point	
Positive opening angle	± 10° from setting point	
Positive opening torque	1.5 Nm	
Mechanical load	F_{R1}= max. 1000 N, F_{R2}= max. 500 N, F_A = max. 750 N	
Standards		
VDE 0660 T100, DIN EN 60947-1, IEC 60947-1 VDE 0660 T200, DIN EN 60947-5-1, IEC 60947-5-1		

Safety Switches for Hinged Protective Equipment

SHS Cable Type A

Article number	Designation	Cable length	Connector type	Number of pins	Special feature
3251103234	AN-KAB.SHS 5M AC STRAIGHT	5 m	Straight	3	AC/DC BG version
3251103236	AN-KAB.SHS 5M AC ELBOW	5 m	Elbow	3	AC/DC BG version

Contact assignments, AC/DC versions

1 = Green/yellow
2 = Black
3 = Blue

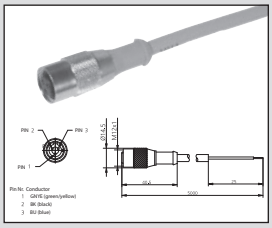

Core insulation / sheathing material:	PVC (UL)/PVC (UL)
Moulding / contact carrier material:	PUR (UL)/PUR (UL)
Max. rated voltage:	300 V AC
Max. current carrying capacity:	3 A
Min. / max. temperature range:	–25 °C / +70 °C
	–13 °F / +158 °F
Cable configuration mm²:	3 x 0.5
Protection class when assembled:	IP67

SHS Cable Type B

Article number	Designation	Cable length	Connector type	Number of pins	Special feature
3251003221	AN-KAB.SHS 2M DC STRAIGHT	2 m	Straight	3	DC approval
3251003222	AN-KAB.SHS 5M DC STRAIGHT	5 m	Straight	3	DC approval
3251003223	AN-KAB.SHS 10M DC STRAIGHT	10 m	Straight	3	DC approval
3251003224	AN-KAB.SHS 2M DC ELBOW	2 m	Elbow	3	DC approval
3251003225	AN-KAB.SHS 5M DC ELBOW	5 m	Elbow	3	DC approval
3251003226	AN-KAB.SHS 10M DC ELBOW	10 m	Elbow	3	DC approval

Contact assignments, DC versions

1 = Brown
2 = –
3 = Blue
4 = Black

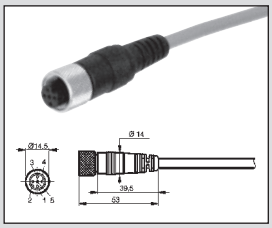

Core insulation / sheathing material:	PVC/PVC
Moulding / contact carrier material:	PUR/PUR
Max. rated voltage:	60 V AC/75 V DC
Max. current carrying capacity:	1.5 A
Min. / max. temperature range:	–25 °C / +70 °C
	–13 °F / +158 °F
Cable configuration mm²:	3 x 0.34
Protection class when assembled:	IP67

SHS Cable Type C

Article number	Designation	Cable length	Connector type	Number of pins	Special feature
3251004219	AN-KAB.SHS 5M AC STRAIGHT	5 m	Straight	4	AC/DC-approval
3251004220	AN-KAB.SHS 5M AC ELBOW	5 m	Elbow	4	AC/DC-approval

Contact assignments, AC/DC versions

1 = Brown
2 = Black
3 = Blue
4 = Green/yellow

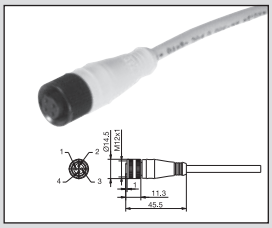

Core insulation / sheathing material:	PVC/PVC
Moulding / contact carrier material:	PUR/Nylon 6.6
Max. rated voltage:	300 V AC
Max. current carrying capacity:	4.0 A
Min. / max. temperature range:	–5 °C / +70 °C
	–13 °F / +158 °F
Cable configuration mm²:	4 x 0.34
Protection class when assembled:	IP68

Notes

Safety Switches for Hinged Protective Equipment

I88 VKS, -VKW, -AHDB; GC VKS, -VKW; Ti2 AHDB

I88-AHDB

I88-VKW

Safety switches for hinged protective equipment

These switches are suitable for applications where SHS switches cannot be used. They are used for safety monitoring of safety gates, safety guards and protective equipment. Two different types of actuator are available for this type of safety switch. The actuators also differ in terms of their attachment to the safety guards.

The AHDB actuator is available in the Ti2 and I88 families. The switch is attached in such a way that a spindle on the safety guard or on the hinge can enter the hole in the safety switch. The safety contact is opened by turning the spindle when opening the safety guard. The switch can be actuated in both directions without a limit stop.

The VKS and VKW actuators are part of the I88 and GC families. The switch is mounted next to the safety guard. The lever fixture is mounted on the safety guard and opens the safety contact as it moves. The integrated longitudinal guide compensates for different pivot radii.

Two different actuator functions are available to facilitate use in varied applications:

- **VKS with vertical setting**
  The safety contact is opened when the lever fixture is moved out of its vertical setting in one of the two possible pivot directions.

- **VKW with horizontal setting**
  The safety contact is opened as the lever fixture moves out of its horizontal setting. A distinction is made between VKW RE (right) and VKW LI (left) in connection with I88 switches. This designation makes it possible to identify whether the switch can be mounted on the right-hand or left-hand side of the safety guard. The GC family only contains switches for mounting on the left-hand side.

Both variants allow maximum pivot movements of 180°.

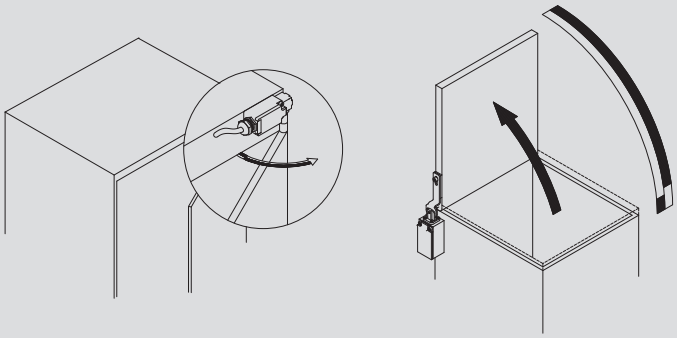

GC-VKS

Technical data

		Ti2 AHDB	I88 AHDB	I88	GC
Electrical data					
Rated insulation voltage	U_i	250 V AC	250 V AC	250 V AC	400 V AC
Conventional thermal current	I_{the} U1Z A2Z	10 A –	10 A 5 A	10 A 5 A	10 A 5 A
Rated operating voltage	U_e	240 V	240 V	240 V	240 V
Utilization category	U1Z A2Z	AC15, 240 V/3 A, –	AC-15, U_e /I_e 240 V / 3 A AC-15, U_e /I_e 240 V / 1.5 A	AC-15, U_e /I_e 240 V / 3 A AC-15, U_e /I_e 240 V / 1.5 A	AC-15, U_e /I_e 240 V / 3 A –
Positive opening action NC contacts	⊖	As per IEC/EN 60947-5-1, Addendum K	As per IEC/EN 60947-5-1, Addendum K	As per IEC/EN 60947-5-1, Addendum K	As per IEC/EN 60947-5-1, Addendum K
Short-circuit protection		Fuse 6A gL/gG	Fuse 10A gL/gG	Fuse 10A gL/gG	Fuse 10A gL/gG
Protection class		II, Insulated	II, Insulated	II, Insulated	I
Mechanical data					
Enclosure		PBT, glass fibre-reinforced	Thermoplastic, glass fibre-reinforced (UL 94-V0)	Thermoplastic, glass fibre-reinforced (UL 94-V0)	Aluminium pressure die-casting
Cover		PA6.6, black	Thermoplastic, glass fibre-reinforced (UL 94-V0)	Thermoplastic, glass fibre-reinforced (UL 94-V0)	Sheet aluminium
Actuation		Axis lever enclosure, lever (metal)	Axis lever enclosure, lever (metal)	Lever (metal)	Lever (steel)
Ambient temperature		–30°C to + 80°C	–30°C to + 80°C	–30°C to + 80°C	–30°C to + 80°C
Mechanical service life		1 x 10^6 switching cycles	1 x 10^6 switching cycles	1 x 10^6 switching cycles	1 x 10^6 switching cycles
B10d		2 mill.	2 mill.	2 mill.	2 mill.
Switching frequency		≤ 50 / min.	≤ 50 / min.	≤ 50 / min.	≤ 20 / min.
Mounting		2 x M4 or 2 x M5 fixed positioning for safety applications	2 x M4	2 x M4	2 x M4
Type of connection		Screw connections	Screw connections	Screw connections	Screw connections
Conductor cross sections		Single-wire 0.5 – 1.5 mm^2 or Stranded wire with ferrule 0.5 – 1.5	Single-wire 0.5 – 1.5 mm^2 or Stranded wire with ferrule 0.5 – 1.5	Single-wire 0.5 – 1.5 mm^2 or Stranded wire with ferrule 0.5 – 1.5	Single-wire 0.5 – 1.5 mm^2 or Stranded wire with ferrule 0.5 – 1.5
Cable entry		1 x M20 x 1,5	1 x M20 x 1,5	1 x M20 x 1,5	1 x M20 x 1,5
Installation position		Any	Any	Any	Any
Protection class		IP65 as per EN 60529	IP65 as per EN 60529	IP65 as per EN 60529	IP65 as per EN 60529
Standards					
VDE 0660 T100, DIN EN 60947-1, IEC 60947-1 VDE 0660 T200, DIN EN 60947-5-1, IEC 60947-5-1					

① Depending on switching system. See Table on Pages 72 – 75.

Safety Switches for Hinged Protective Equipment

	Ti2 AHDB	
	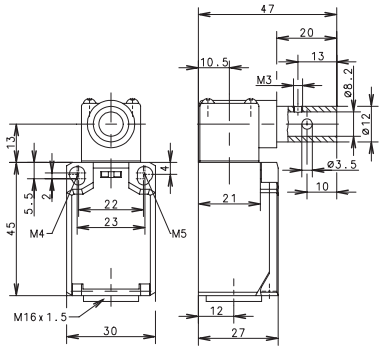	

Switching operation	Slow-action	Snap-action	Slow-action	Snap-action
1 NC / 1 NO contact	**6188100030** TI2-U1Z AHDB	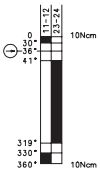		
2 NC contact				
2 NO contacts				
1 NC / 1 NO contact **Overlapping**				
Approvals				

Replacement actuator: –

Special features / variants
(on request)

Replacement actuator: –

Special features / variants
(on request)

- Available in different actuation directions

	GC VKS	GC VKW
	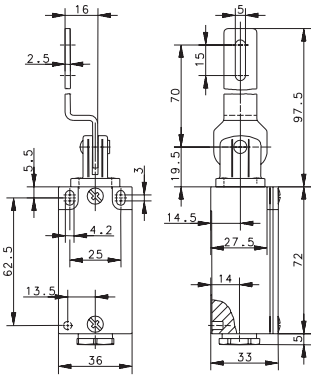	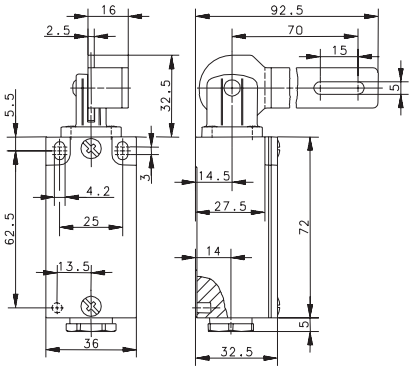
Switching operation	**Slow-action** **Snap-action**	**Slow-action** **Snap-action**
1 NC / 1 NO contact	**6121100622** GC-U1Z VKS 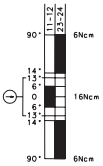	**6121100623** GC-U1Z VKW 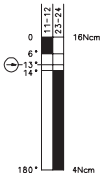
2 NC contact		**6121800835** GC-A2Z VKW 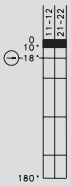
2 NO contacts		
1 NC / 1 NO contact **Overlapping**		
Approvals		

Replacement actuator: 3912001277

Replacement actuator: 3912001278

Special features / variants
(on request)

Special features / variants
(on request)

Notes

Non-contact Safety Sensor SRF

The SRF (Safety RFID) is a non-contact safety sensor, that monitors moveable safety guards, such as doors, flaps and hoods. This particularly compact sensor protects employees from injuries by shutting down or not starting up machines when the safety guard is not properly closed.

With its innovative diagnostic system, the SRF makes safety circuits suitable for Industry 4.0.

The system provides a multitude of diagnostic data of each sensor, even in a series connection, to support smart production.

Diagnostic data is fed into the machine control system via I/O Link or alternatively displayed on a smartphone by way of NFC technology. In this way, 20 different diagnostic information of each sensor can be retrieved and made available.

This diagnostic data delivers cost-effective predictive maintenance in a simple way. Through its advanced fault recognition capability, costly machine shutdowns can be prevented.

This way, your machinery and plant will work even more efficiently!

reddot award 2018
winner

Innovative

- New innovative Daisychain Diagnostics (DCD)
- Reading diagnostics information through Android smartphone via NFC interface
- Transmission of data via I/O Link interface
- Simple and specific maintenance thanks to pre-failure monitoring
- Cost reduction by eliminating machine downtimes
- Connecting the sensor information of six different diagnostic circuits
- Support of an energy-optimised application: Voltage levels known at any time

Safe

- Safe sensors in Cat. 4, PL e or SIL CL 3
- Safe serial connection of SRF up to PL e, Cat. 4 / SIL CL 3
- Coded and unique actuator

Versatile

- Protection class of IP69
- Local reset button
- Compact design
- Diagnostics system DCD
- PNP diagnostics
- Fault tolerant output
- Single and series connection possible
- Connection via M12 plug

Non-contact Safety Sensor SRF

Benefits and advantages SRF

- **Cost-saving:** thanks to a four-wire unshielded standard connection cable from sensor ❶
- **Compact:** small in size, flexible in use
- **Safe:** up to PL e – even in series connection, with high defeat protection (according to ISO 14119)
- Series connection of the sensors through internal safety electronics without compromising the safety level

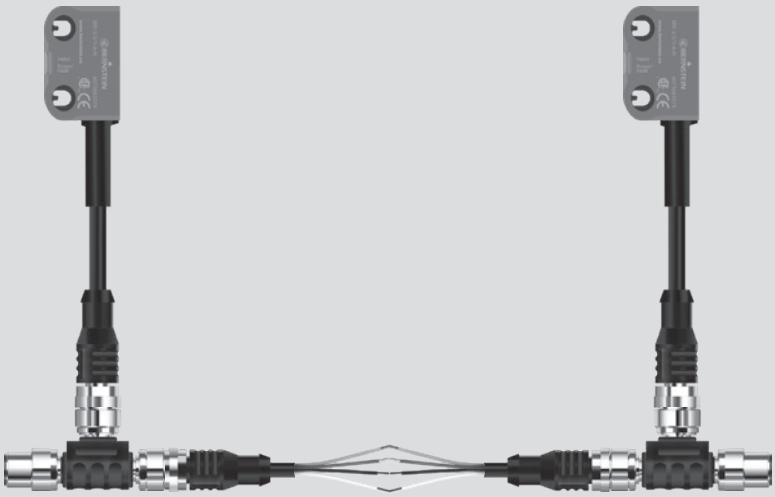

❶

Coding types

- Low coding level:
  Coded sensor with only one possible code
- High coding level:
  Coded sensor with more than 1000 different codes
- Unique coding: High coding level – but no spare actuator accepted

Diagnostics (not safety related)

- PNP diagnostics:
  Signalling contact as PNP NO output that indicates whether the safety guard is closed
- DCD System:
  Detailed diagnostic system DCD that submits a complete status image of a sensor, even in series connection

Reset function

Local reset of the sensor to enable restart of the machine.

Fault tolerant outputs

The fault tolerant outputs prevent an unexpected machine stop and allow to run down the machine in a controlled manner.

This is how it works:

If an error is detected at one output, the sensor indicates this with a flash code –whilst simultaneously transmitting the information via the DCD system. After 20 minutes, the second still intact output, will switch off.

Benefits and advantages diagnostics

- Comprehensive diagnostics information for each sensor and for the entire system
- Diagnostic data simply retrievable
- Time and cost savings during commissioning, maintenance and fault investigation
- Protection against unexpected machine stops though pre-fault detection
- Display of diagnostic data on smartphones via NFC
- Simple troubleshooting through reading out the fault memory via NFC also in case of missing power supply

Non-contact Safety Sensor SRF

SRF for series connection

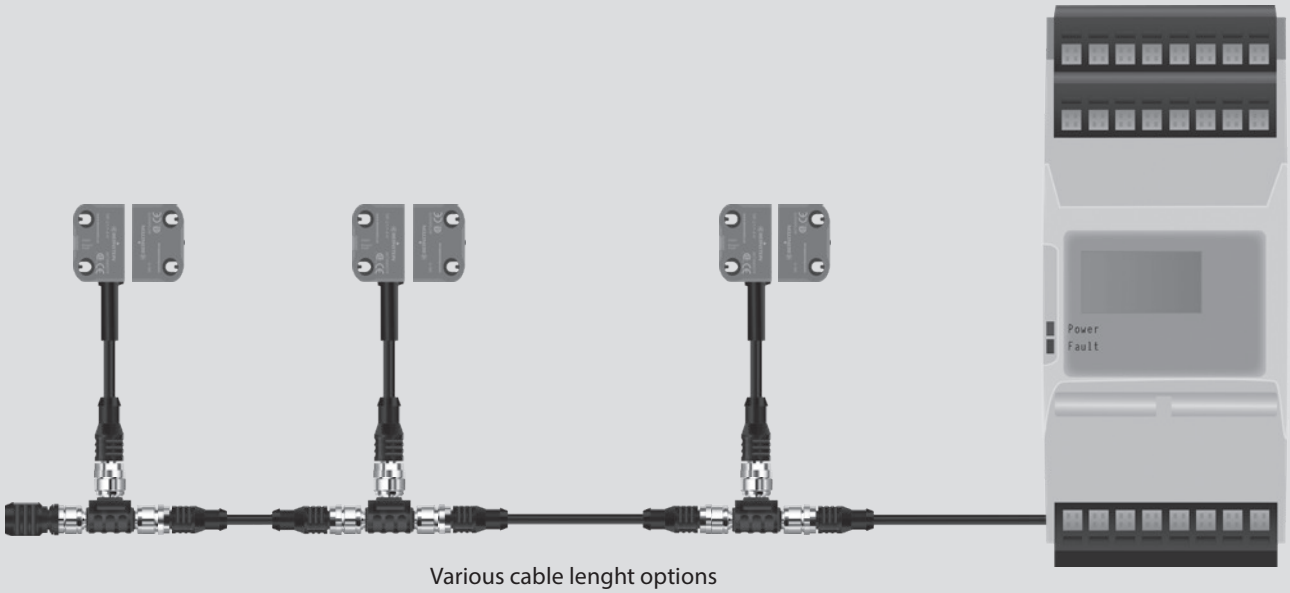

Various cable lenght options

Article number	Designation	Unique	High coding level	Low coding level	PNP diagnostics	Daisychain diagnostics (DCD)	Reset input	M12 8-pin connection with 25 cm cable
6075685094	SRF-4/1/1-E0.25-U	x			x			x
6075685095	SRF-4/1/1-E0.25-H		x		x			x
6075685096	SRF-4/1/1-E0.25-L			x	x			x
6075685097	SRF-4/2/1-E0.25-U	x			x		x	x
6075685098	SRF-4/2/1-E0.25-H		x		x		x	x
6075685099	SRF-4/2/1-E0.25-L			x	x		x	x
6075685100	SRF-5/1/1-E0.25-U	x				x		x
6075685101	SRF-5/1/1-E0.25-H		x			x		x
6075685102	SRF-5/1/1-E0.25-L			x		x		x
6075685080	SRF-5/2/1-E0.25-U	x				x	x	x
6075685103	SRF-5/2/1-E0.25-H		x			x	x	x
6075685104	SRF-5/2/1-E0.25-L			x		x	x	x
6075687078	SRF-0	Actuator SRF, suitable for all coding levels (not included, please order separately)						

SRF for single connection

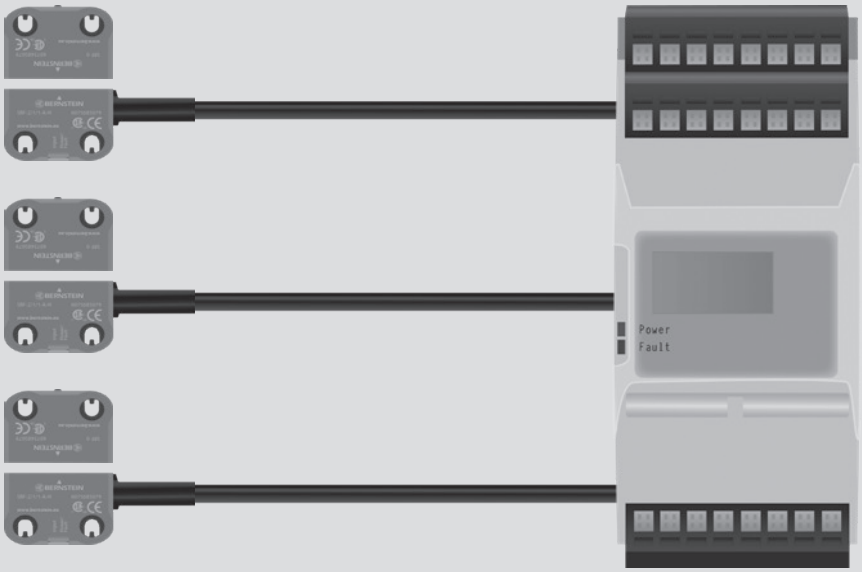

Article number	Designation	Unique	High coding level	Low coding level	PNP diagnostics	M12 5-pin connection with 25 cm cable	2 m cable with open cable end
6075685117	SRF-2/1/1-A2-U	x			x		x
6075685079	SRF-2/1/1-A2-H		x		x		x
6075685118	SRF-2/1/1-A2-L			x	x		x
6075685119	SRF-2/1/1-E0.25-U	x			x	x	
6075685120	SRF-2/1/1-E0.25-H		x		x	x	
6075685121	SRF-2/1/1-E0.25-L			x	x	x	
6075687078	SRF-0	Actuator SRF, suitable for all coding levels (not included, please order separately)					

Non-contact Safety Sensor SRF

Diagnostic module

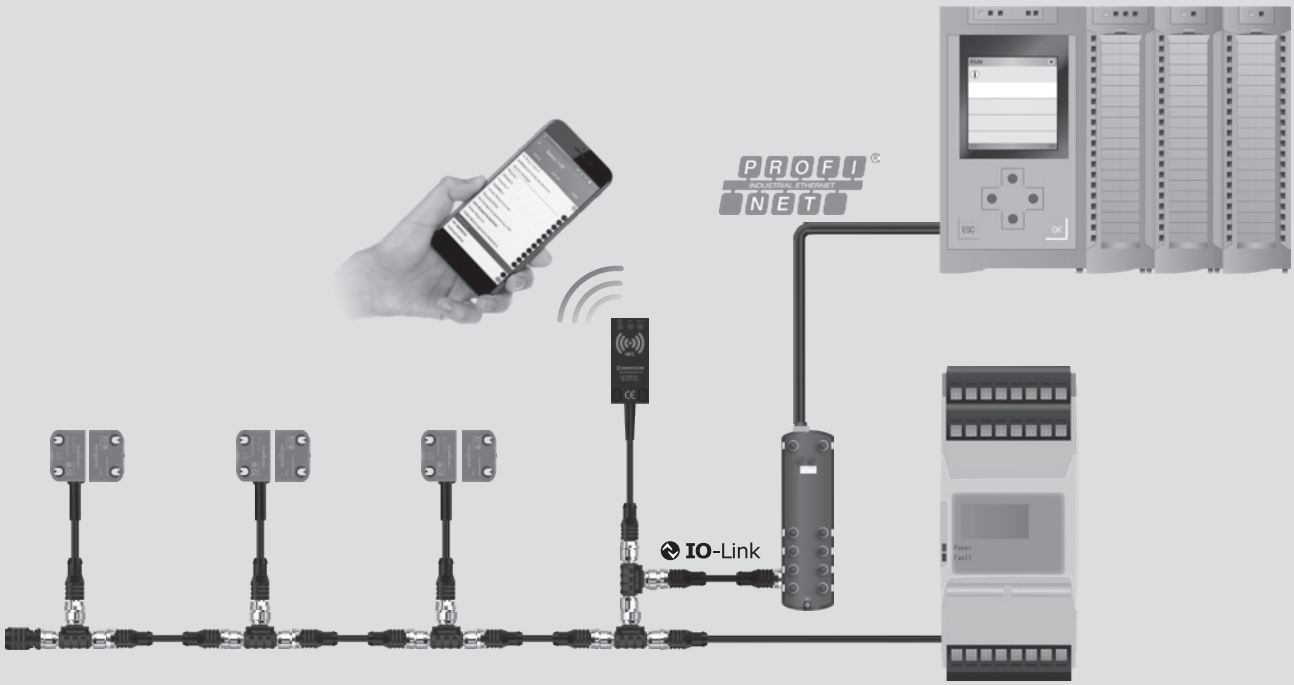

Article number	Designation	Enclosure	Number of diagnostic circuits	Digital output	Interfaces		
					I/O Link	NFC	USB 2.0
6075619122	SRF DI-C-0/1-T	DIN rail housing 22.5 mm	1	-	x	x	x
6075619123	SRF DI-C-8/1-T	DIN rail housing 22.5 mm	1	8	x	x	x
6075619124	SRF DI-C-16/1-T	DIN rail housing 22.5 mm	1	16	x	x	x
6075619125	SRF DI6-C-0/1-T	DIN rail housing 22.5 mm	6	-	x	x	x
6075689126	SRF DI-F-0/2-E0.25	Rectangular sensor enclosure (use directly at the machine)	1	-	x	x	

Accessories

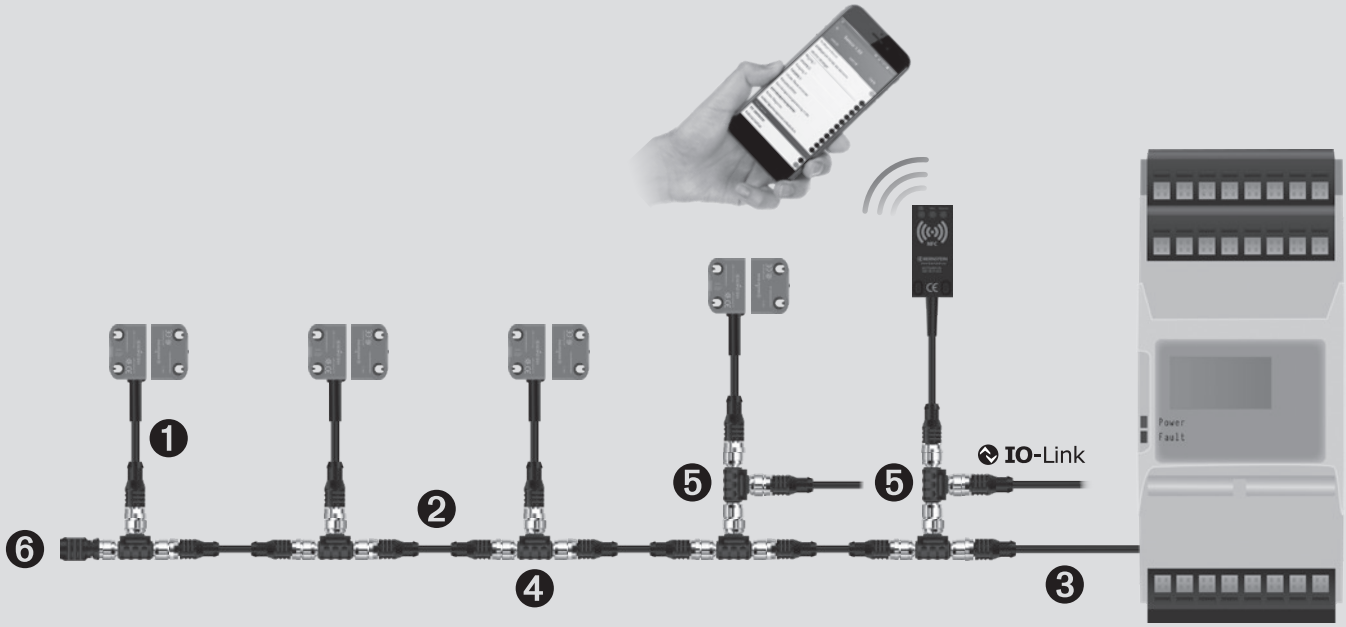

Connection cable and connecting cable

Pos.-Nr.	Article number	Designation	Description	Plug alignment	Plug 1	Plug 2	Number of plugs	Cable length in meter
1	**6075689085**	S1W-M12A8/BW-1PU	Connecting cable	straight	M	F	8	1
1	**6075689086**	S1W-M12A8/BW-2PU	Connecting cable	straight	M	F	8	2
2	**6075689087**	S1W-M12C4/AW-2PU	Connecting cable	straight	M	F	4	2
2	**6075689088**	S1W-M12C4/AW-5PU	Connecting cable	straight	M	F	4	5
2	**6075689089**	S1W-M12C4/AW-10PU	Connecting cable	straight	M	F	4	10
3	**6075689092**	SFW-M12B5/AW-2PU	Connecting cable	straight	F		5	2
3	**6075689093**	SFW-M12B5/AW-5PU	Connecting cable	straight	F		5	2
3	**6075689090**	SFW-M12C4/AW-0.5PU	Connecting cable	straight	F		4	0.5
3	**6075689091**	SFW-M12C4/AW-2PU	Connecting cable	straight	F		4	2

T adapter, termination plug and fixing screws

Pos.-Nr.	Article number	Designation	Description
4	**6075989082**	ATS-M12/4-M12/8	T adapter for series connection
5	**6075989083**	ATD-M12/8-M12/4	T adapter for connection of I/O link and reset button
6	**6075689084**	AEP-M12/4	Termination plug M12
	6075689127	AT-CLIP-M12	Fixing clip for T adapter
	6075689128	One-way screw M4 x 16	10 x Fixing screws M4 x 16 One-way screw

Non-contact Safety Sensor SRF

Technical data SRF

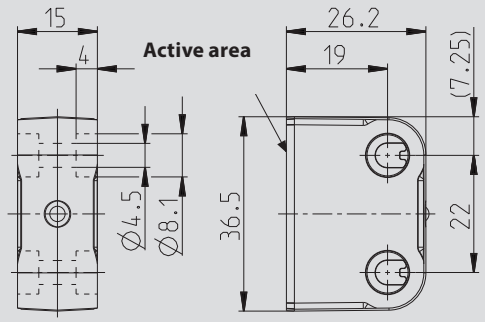

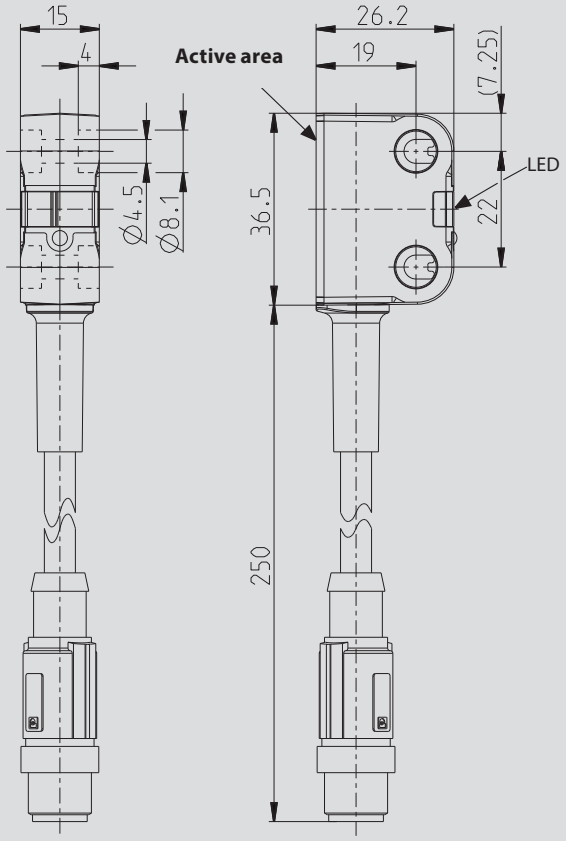

Electrical data

- Rated operational voltage U_e: 24 V
- Output current of the safety outputs I_e: 100 mA
- Output current of the message output I_e: 10 mA

Mechanical data

- Housing: PA66 + PA6, red, self-extinguishing
- Connection cable: PUR
- Mounting holes: Ø 4,5 (for M4 screws)
- Displays: 1 × LED red/green operating status
  1 × LED yellow actuation status
- Ambient temperature: -25 °C to +70 °C
- Protection class: IP69

Safety data sheet

- PL e / Kat. 4 (according to EN ISO 13849-1)
- SIL CL 3 (according to DIN EN 62061)
- $PFH_D = 6 \times 10^{-9}$ 1/h
- Mission time T_M: 20 years

- Switching distance:
  - Rated operating distance S_n: 13 mm
  - Assured switching distance – On S_{ao}: 10 mm
  - Assured switching distance – Off S_{ar}: 25 mm
  - Hysteresis: 2 mm

- Switch-off delay t_a: max. 100 ms
- Ready delay t_v: max. 2 s

Technichal data diagnostic module

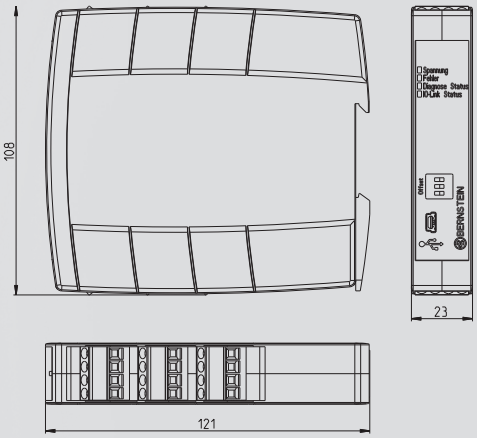

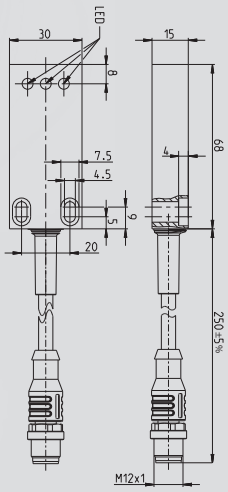

Cabinet module

- Rated operational voltage U_e: 24 V DC
- I/O Link protocol: V1.1
- Output current per signal output I_e: 50 mA
- Ambient temperature: 0 °C to +60 °C
- Protection class: IP20

Field module

- Rated operational voltage U_e: 24 V DC
- I/O Link protocol: V1.1
- Output current per signal output I_e: –
- Ambient temperature: -25 °C to +70 °C
- Protection class: IP69

Safety relay SCR ON

The SCR ON safety relay monitors the SRF's safety outputs.

Product selection of SCR safety relays see also p. 147

Features

- PL e to ISO 13849
- 3 enabling paths
- Feedback loop with monitored / automatic reset

Article number	Designation
6075111020	SCR ON4-W22-3.6-S

Safety sensors MAK

To achieve a PL or SIL value with the MAK safety sensors, it is necessary to connect them to a safety evaluation unit. The magnetic safety sensors are dual channel versions. The evaluation unit (BERNSTEIN designation: MÜZ) monitors the correct switching of the two MAK channels and a defined time window in which the two channels must switch.

With the combination of MAK and MÜZ, a PL D and a SIL 3 can be reached. Besides the 3 different types of magnetic safety switches, BERNSTEIN also offers two different evaluation units.

MAK-4236-x with magnet TK-42-CD

Product features

- Performance Level d
- Redundancy with NO and NC contacts
- Switching distance: 6 mm
- IP67

MAK-5236-x with magnet TK-52-CD / 2

Magnetic controllers for safety functions

BERNSTEIN offers magnetic controllers for safety functions that fulfill performance level d according to EN 13849-1 and SIL 3 according to EN 61508 or rather EN 62061.

A safety system consists of the safety magnetic controllers and a coded transducer unit.

The anti-tamper security of the transducer unit is achieved by variable coding of the actuator magnets and magnetic switches.

Depending on the type of device, one or two coded transducer units (magnetic switch with corresponding magnet) of type:

- MAK-4236
- MAK-5236
- MAK-5336

can be connected to and monitored by the safety magnetic controllers.

MAK-5336-x with magnet TK-43-CD

The safety magnetic controller processes the NC or NO contact signals coming from the coded magnetic switches.
Thereby, it is possible to detect the opening of the safety guard (door, hatch, protective hood etc.) and to turn off the safety output. Thanks to the redundant evaluation, the magnetic controller is switched to the "safe state" should a fault or manipulation occur, or if the time difference is exceeded between the NC contact signal and the NO contact signal. An LED indicates that the safety magnetic controller is in the "safe state".

To ensure fault detection of the switch-off device, the MÜZ-102 offers the possibility to connect a return circuit. The system additionally features a NC contact for signalling purposes.

- Redundancy by NO and NC contacts
- Manipulation safety by coding
- Monitoring of the return circuit (depending on device type)

BERNSTEIN

Magnetic controllers for safety functions

TÜV certified

- EN ISO 13849-1 Performance Level d
- EN 61508 and EN 62061 SIL 3
- EN 60947-5-3 Single fault security S

Type designation		MÜZ-102/D24-FL-DA	MÜZ-202/D24-FL
Article number		**6392701306**	**6392702307**
Max. number of connectable transducer units		1	2
Safety output, NO contact		●	●
Feedback circuit		●	–
Data output (NC contact)		●	–
Technical data			
Operating voltage		24 V DC	24 V DC
Operating current		60 mA	60 mA
Switching capacity, safety output			
Switching voltage	max	AC 250 V	AC 250 V
Switching current	max	8 A	8 A
Switching power	max	1700 VA	1700 VA
LED: Hazard status/switching status		●/–	●/–
LED: Supply voltage/ON		●	–
Relay: Positive-action/standard		●/–	●/–
Ambient conditions			
Temperature range	min/max	0 °C/+55 °C	0 °C/+55 °C
		32 °F/+131 °F	32 °F/+131 °F
Protection class (to IEC 529, EN 60529)		IP20	IP20
Enclosure material		PC	PC
Mounting system (DIN 50022)		TS 35	TS 35
Type of connection: Terminal block		max. 2.5 mm²	max. 2.5 mm²

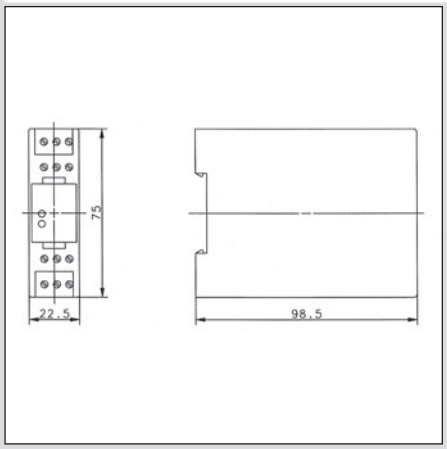

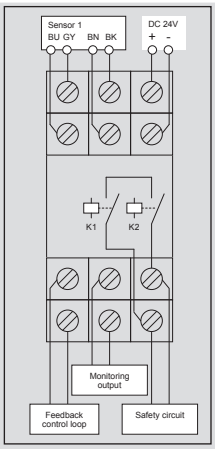

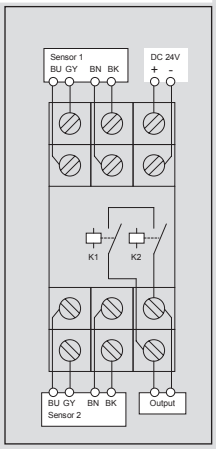

Coded transducer units

Magnetic switches

Type designation		
Article number		
Cable length		
Type designation		
Article number		
Cable length		
Type designation		
Article number		
Cable length		
Type designation		
Article number		
Cable length		
Ambient conditions		
Temperature range		min/max
Protection class (to IEC 529, EN 60529)		
Enclosure material		
Sensing distance	S on	min
	S on	max
Actuating magnet		
Type designation		
Article number		
Use: safety magnetic controller		
Article number		

All dimensions in mm

Other types available on request.

MAK-4236-3	MAK-5236-3	MAK-5336-3
6490642315	**6490652316**	**6490653317**
3 m PVC cable	3 m PVC cable	3 m PVC cable
MAK-4236-6	MAK-5236-6	MAK-5336-6
6490642302	**6490652307**	**6490653311**
6 m PVC cable	6 m PVC cable	6 m PVC cable
MAK-4236-9	MAK-5236-9	MAK-5336-9
6490642303	**6490652308**	**6490653312**
9 m PVC cable	9 m PVC cable	9 m PVC cable
MAK-4236-STK	MAK-5236-STK	MAK-5336-STK
6490642305	**6490652309**	**6490653313**
4-pin connector	4-pin connector	4-pin connector

–5 °C/+70 °C	–5 °C/+70 °C	–5 °C/+70 °C
+23 °F/+158 °F	+23 °F/+158 °F	+23 °F/+158 °F
IP67	IP67	IP67
PA 6.6	PBT	PA 6.6
4 mm	3 mm	3 mm
14 mm	14 mm	14 mm
TK-42-CD	TK-52-CD/2	TK-43-CD
6402042310	**6402052311**	**6402043312**
6392701306	**6392701306**	**6392701306**
6392702307	**6392702307**	**6392702307**

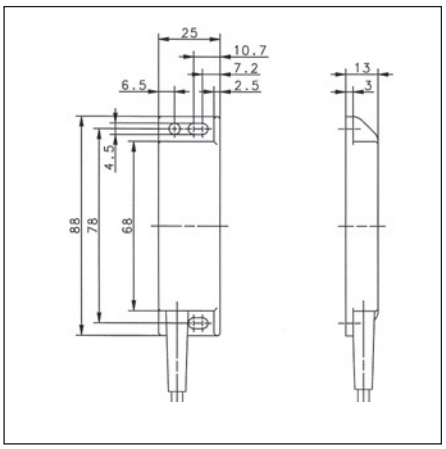

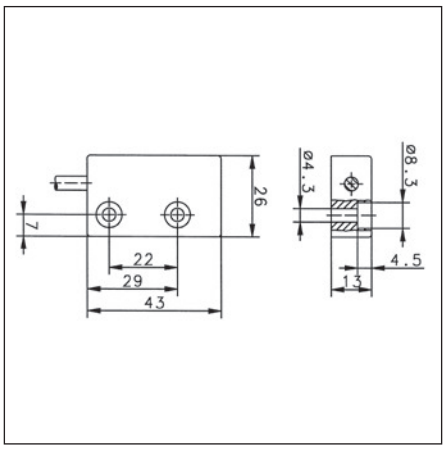

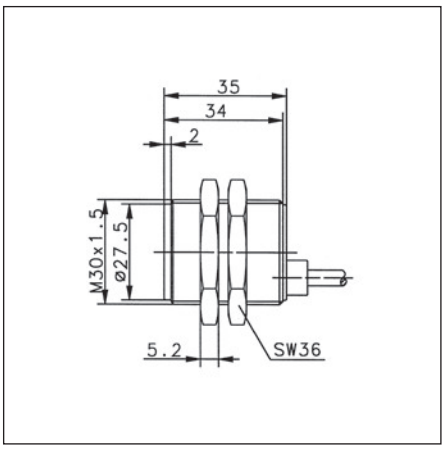

Notizen

Safety Rope Pull Switches

SRM, SR

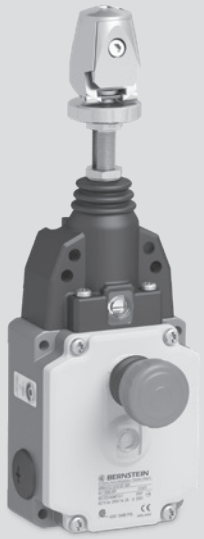

SRM

SR

General information on safety rope pull switches

The series SR and SRM safety rope pull switching devices developed and manufactured by BERNSTEIN AG are designed and approved in accordance with the standards IEC 947-5-5, DIN EN 60947-5-5 and ISO 13850, i.e. on actuation or in the event of cable breakage, the emergency stop switching device locks automatically and can only be reset to its initial setting by means of the resetting device on the switch.

In order for the overall system to conform to the standards EN 60947-5-5 and EN 13850 governing the emergency stop function of rope pull switches it is necessary to integrate a spring in the system. The reasoning behind this requirement is that a person who triggers the emergency stop functions does not need to consider the activation direction. With the spring it is possible to pull the cable in the direction of the rope pull switch, thus activating the emergency stop function.

Safety rope pull switches may only be used in control power circuits. Safety rope pull switches are used on accessible sides of conveyor systems or machines. In contrast to Emergency Stop switching devices (e.g. mushroom pushbuttons) installed at intervals, with which the emergency stop signal can only be generated at the device itself, with the safety rope pull switch it is possible to generate the signal at any point in a section. Depending on the type of switching device, a span of up to 75 m can be achieved with a pull cable connected to the pulling element.

The maximum possible span length of a pull cable switch is always dependent on the temperature fluctuations to which the system is exposed. It is possible that the pull cable switch may trip due to the fact that, owing to its temperature coefficient, the length of the steel cable can change in response to changes in temperature. Ultimately, this change in length is dependent on the length of the cable, the difference in the temperature change and the type of springs used in the pull cable switch. Overview 1 shows which cable lengths are possible as a function of change in temperature.

Pull cable counterspring
With overstretch safeguard based on compression spring principle

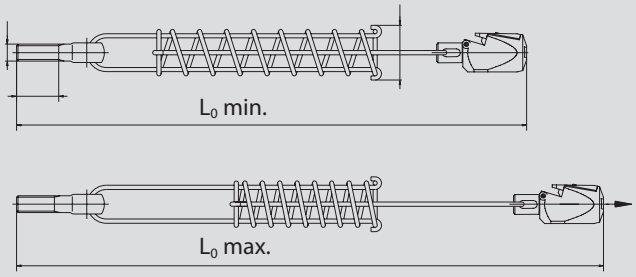

Application		
Type	SR...100/SR...175/SRM...175	SR...300/SRM...300
Spring Art. No.	**3911042153**	**3911042154**
$L_{0\,min.}$	383	483
$L_{max.}$	487	653

Advantages of SRM / SR safety rope pull switches:

- The SR (plastic enclosure) and SRM (metal enclosure) safety rope pull switches are available with the Quickfix quick-connect system, which renders unnecessary cable eye stiffeners, cable grips and turnbuckles that are otherwise required for mounting the cable. Added to this, the time required to install the cable is drastically reduced. Versions with a conventional eye are, of course, also available.

- All variants of the SRM and especially of the SR are equipped with an integrated emergency stop impact button that can be actuated by pressing in hazardous situations. In the same way as pulling the pull cable, the safety contacts are opened and the switch is locked.

- The type SRM...E-... safety rope pull switches are optionally available with a remote indicator for monitoring the cable tension. This option has an integrated sensor unit that monitors situations in which the cable tension may overshoot or undershoot the permissible value, or triggering of the safety rope pull switch is imminent.

  This electronic output signals in good time that maintenance / adjustment is required otherwise the machine will shut down. This output can also be used for event signalling purposes or optionally available indicator lamps can be connected. This connection configuration conforms to "preventative maintenance" requirements.

- During installation / adjustment of the cable span, the correct tension of the cable can be checked through the integrated inspection window. To ensure optimum cable tension as part of the adjustment procedure, the tips of the indicator arrows should be aligned with the marking.

- A second inspection window integrated in the SRM version makes it possible to check the status of the locking function and of the contacts. Yellow in the inspection window indicates that the safety rope pull switch is locked. Green in the inspection window indicates that the rope pull switch is ready for operation and the cable assembly is monitored.

Overview 1

	Span L max. in metres [m]																																							
	1	2	3	4	5	6	7	8	9	10	11	12	13	14	15	16	17	18	19	20	22	24	26	28	30	32	34	36	38	40	42	44	46	48	50	55	60	65	70	75
Max. temperature variation in Kelvin (K)	**+/−80 K** ; +/−110 K																																							
	+/−70 K ; +/−100 K																																							
	+/−60 K ; +/−90 K																																							
	+/−50 K ; +/−70 K																																							
	+/−40 K ; +/−50 K																																							
	+/−30 K ; +/−40 K																																							
	+/−20 K ; +/−26 K																																							
	+/−10 K ; +/−14 K																																							
	+/−7 K ; +/−9 K																																							
SR...100	Max. span 25 metres																																							
SR...175 / SRM...175	Max. span 37.5 metres																																							
SR...300 / SRM...300	Max. span 75 metres																																							

The parameter 100, 175 and 300 in the product designation indicates the force of the springs used in the rope pull switch. It should be noted that a greater actuating force is required for higher spring forces.

The indications of the temperature ranges refer to a system for emergency stop applications with return spring.

With a system without return spring, emergency stop applications are not permitted.
In this case, the above mentioned Kelvin values have to be halved.

Installation example

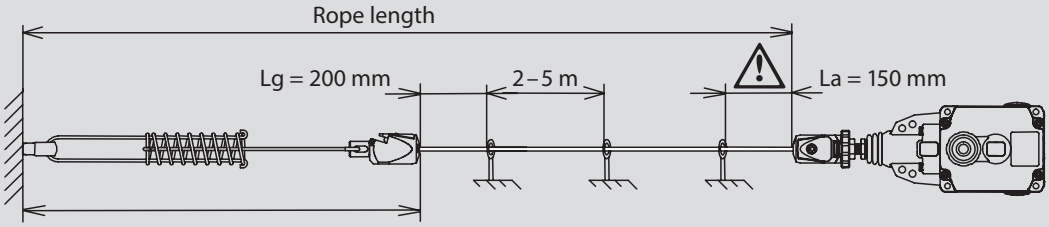

Safety Rope Pull Switches

Max. span length	75 metres (Dimensioned drawing 1)		37,5 metres (Dimensioned drawing 2)	
	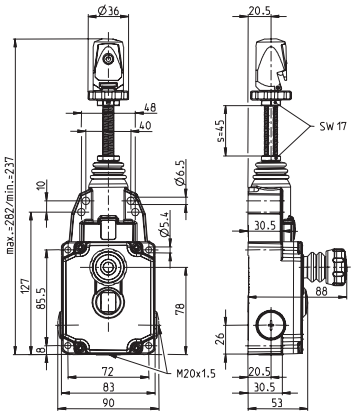		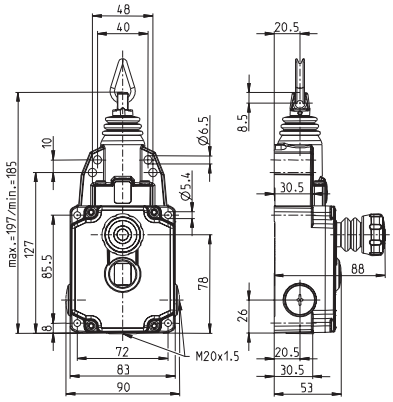	
	2 NC / 2 NO	**3 NC / 1 NO**	**2 NC / 2 NO**	**3 NC / 1 NO**
Quickfix (Dimensioned drawing 1)	**6012929087** SRM-U1Z/U1Z-QF-300	**6012999096** SRM-A2Z/U1Z-QF-300	**6012929085** SRM-U1Z/U1Z-QF-175	**6012999094** SRM-A2Z/U1Z-QF-175
Eye (Dimensioned drawing 2)	**6012921091** SRM-U1Z/U1Z-LU-300	**6012991100** SRM-A2Z/U1Z-LU-300	**6012921089** SRM-U1Z/U1Z-LU-175	**6012991098** SRM-A2Z/U1Z-LU-175
Quickfix with remote monitoring (Dimensioned drawing 1)	**6012929088** SRM-U1Z/U1Z-QF-300-E	**6012999097** SRM-A2Z/U1Z-QF-300-E	**6012929086** SRM-U1Z/U1Z-QF-175-E	**6012999095** SRM-A2Z/U1Z-QF-175-E
Eye with remote monitoring (Dimensioned drawing 2)	**6012921092** SRM-U1Z/U1Z-LU-300-E	**6012991101** SRM-A2Z/U1Z-LU-300-E	**6012921090** SRM-U1Z/U1Z-LU-175-E	**6012991099** SRM-A2Z/U1Z-LU-175-E
Approvals				

Technical data

Electrical data		
Rated insulation voltage	U_i max.	250 V AC
Rated operating voltage	U_e max.	240 V
Conventional thermal current	I_{the}	10 A
Utilisation category	U_e /I_e	AC-15, U_e /I_e 240 V / 3 A; 120 V/6 A DC-13 U_e /I_e 250 V/0.27 A; 125 V/0.55 A
Short-circuit protection		6 A gL/gG
Protection class		I
Mechanical data		
Enclosure	Aluminium pressure die-casting	
Ambient temperature	–30°C to + 80°C	
Mechanical service life	1 x 10^5	
Switching frequency max.	≤ 20 / min.	
Mounting	4 x M6 or 4 x M5	
B10d	0.2 mill.	
Type of connection	Screw connections	
Conductor cross sections	Single-wire 0.5 – 1.5 mm^2	
Cable entry	3 x M20 x 1.5	
Protection class	IP67 conforming to IEC/EN 60529	
Standards		
VDE 0660 T100, DIN EN 60947-1, IEC 60947-1 VDE 0660 T200, DIN EN 60947-5-1, IEC 60947-5-1 VDE 0660 T210, DIN EN 60947-5-5, IEC 60947-5-5 ISO 13850		

Contact type	**1 NC / 1 NO (Zb)**	**2 NC (Zb)**
Action contacts	**U1Z**	**A2Z**
Circuit symbol	**Slow-action contacts** 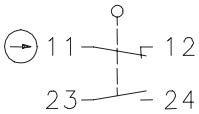	**Slow-action contacts** 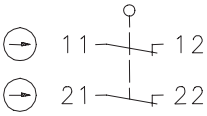
Switching diagram		

On
OFF

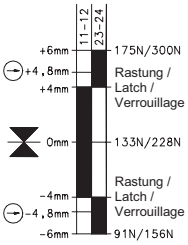

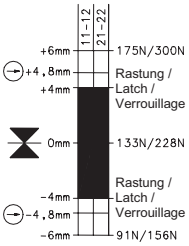

The pulling force data depend on the type of switch used. (SRM...175/SRM...300)
Tolerances: Switching point + / – 0.5 mm, actuating force + / – 15 %

Safety Rope Pull Switches

Max. span length	75 metres (Dimensioned drawing 1)		37.5 metres (Dimensioned drawing 2)	
	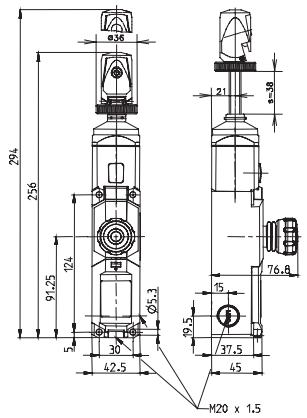		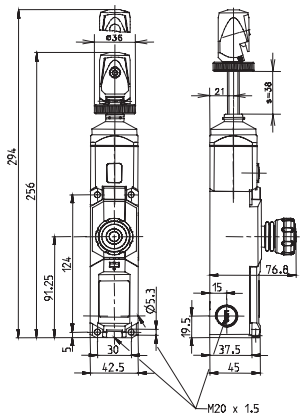	
	2 NC / 2 NO	**4 NC**	**2 NC/ 2 NO**	**4 NC**
Quickfix (Dimensioned drawing 1)	**6011629072** SR-U2Z-0-QF-300-L0-0-0	**6011691082** SR-A4Z-0-QF-300-L0-0-0	**6011629071** SR-U2Z-0-QF-175-L0-0-0	**6011691081** SR-A4Z-0-QF-175-L0-0-0
Quickfix N.A. (Dimensioned drawing 2)	**6011629069** SR-U2Z-NA-QF-300-L0-0-0	**6011691079** SR-A4Z-NA-QF-300-L0-0-0	**6011629068** SR-U2Z-NA-QF-175-L0-0-0	**6011691078** SR-A4Z-NA-QF-175-L0-0-0
Eye (Dimensioned drawing 3)	**6011621066** SR-U2Z-0-LU-300-L0-0-0	**6011691076** SR-A4Z-0-LU-300-L0-0-0	**6011621065** SR-U2Z-0-LU-175-L0-0-0	**6011691075** SR-A4Z-0-LU-175-L0-0-0
Approvals				

Technical data

Electrical data		
Rated insulation voltage	U_i max.	250 V AC
Rated operating voltage	U_e max.	240 V
Conventional thermal current	I_{the}	10 A
Utilisation category	U_e /I_e	AC-15, U_e /I_e 240 V / 3 A
Short-circuit protection		6 A gL/gG
Protection class		II, Insulated
Mechanical data		
Enclosure	PA 6 GV (UL94-V0)	
Ambient temperature	–25°C to +70°C	
Mechanical service life	1 x 10^5 switching cycles	
Switching frequency max.	≤ 20 / min.	
Mounting	4 x M5	
B10d	1 x 10^5 million	
Type of connection	Cage clamp terminal	
Conductor cross sections	≤ 1.5 – 2 mm^2	
Cable entry	3 x M20 x 1.5	
Protection class	IP67 conforming to IEC/EN 60529	
Standards		
VDE 0660 T100, DIN EN 60947-1, IEC 60947-1 VDE 0660 T200, DIN EN 60947-5-1, IEC 60947-5-1 VDE 0660 T210, DIN EN 60947-5-5, IEC 60947-5-5 ISO 13850		

25 metres (Dimensioned drawing 3)

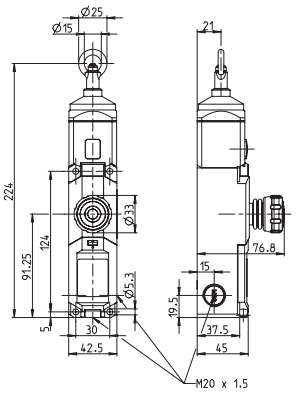

2 NC / 2 NO	4 NC
6011629070 SR-U2Z-0-QF-100-L0-0-0	**6011691080** SR-A4Z-0-QF-100-L0-0-0
6011629067 SR-U2Z-NA-QF-100-L0-0-0	**6011691077** SR-A4Z-NA-QF-100-L0-0-0
6011621064 SR-U2Z-0-LU-100-L0-0-0	**6011691074** SR-A4Z-0-LU-100-L0-0-0

Contact type	2 NC / 2 NO (Zb)	4 NC
Action contacts	**U2Z**	**A4Z**
Circuit symbol	**Slow-action contacts** 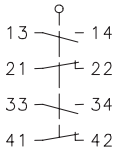	**Slow-action contacts** 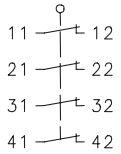

Switching diagram

On
Off

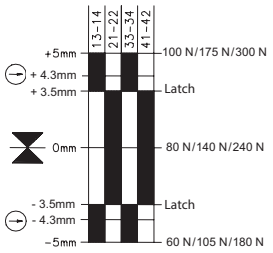

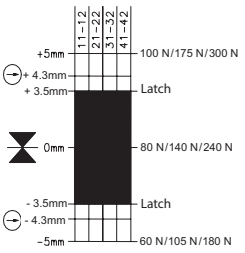

The pulling force data depend on the type of switch used. (SR...100/SR...175/SR...300)
Tolerances: Switching point +/– 0.5 mm, actuating force + 30 % (SR...100), actuating force +/– 15 % (SR...175/SR...300)

Double-Spanned Rope Pull Switches

Si1, Si2

Si2

Si1

BERNSTEIN double-spanned rope pull switches (Si1 and Si2) are also used in emergency stop applications. When the cable is pulled the switching lever is deflected in the corresponding direction and the system shut down.

The switches are available in two metal versions, the Si1 and Si2.

These types of rope pull switch are ideally suited for applications with high temperature fluctuations and long cable spans. With their sturdy enclosure, the Si1 and Si2 are the perfect switches for harsh environments.

Two cables spanned in opposite directions are attached to the switching device. The countersprings are secured to the wall at the ends of the cables. Provided the change in temperature is the same at all points along the cable, the springs will effectively compensate for the change in cable length.

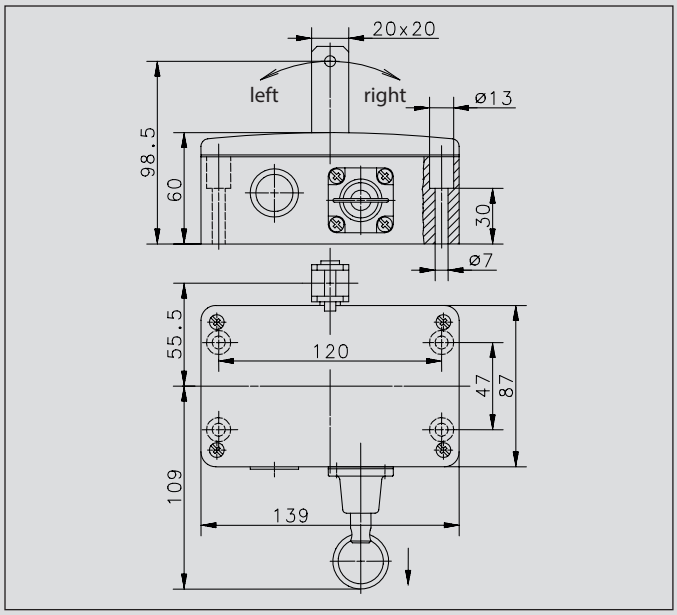

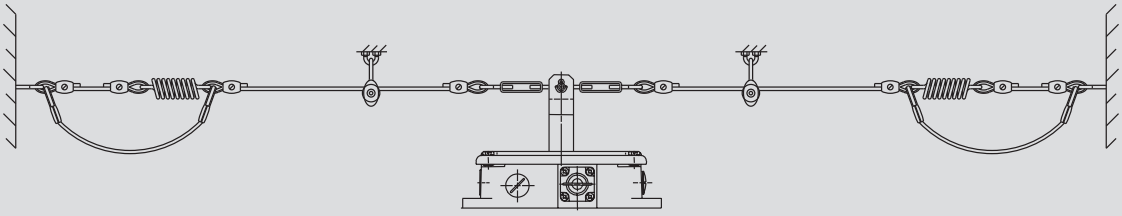

Product selection

Designation	Article number	Max. span length
SI1-U2Z AK R-RAST	**6014735001**	2 x 50 m
SI1-U1Z/U1Z AK R-RAST	**6014735025**	2 x 50 m
SI2-U2Z AK R-RAST	**6015735002**	2 x 50 m

Technical data

		Si1	Si2
Electrical data			
Rated insulation voltage	U_i	250 V AC	400 V AC
Rated operating voltage	U_e	250 V	240 V
Conventional thermal current	I_{the}	10 A	10 A
Utilisation category		AC-15, U_e /I_e 240 V / 3 A	AC-15, U_e /I_e 240 V / 3 A
Positive opening action	⊖	as per IEC/EN 60947-5-1, Addendum K	as per IEC/EN 60947-5-1, Addendum K
Short-circuit protection		Fuse 6 A gL/gG	Fuse 10 A gL/gG
Protection class		I	I
Mechanical data			
Enclosure		Aluminium sand casting	Cast iron
Cover		Aluminium sand casting	Cast iron
Actuation		Lever (GRP)	Lever (GRP)
Ambient temperature		– 30°C to + 80°C	– 30°C to + 80°C
Contact type		2 NC / 2 NO contact (Zb)	2 NC / 2 NO contact (Zb)
Mechanical service life (up to) ①		1 x 10^6 switching cycles	1 x 10^6 switching cycles
Switching frequency max.		≤ 10 / min.	≤ 10 / min.
Mounting		4 x M8	4 x M8
B10d (up to) ①		2 mill.	2 mill.
Type of connection		8 Screw connections (M3, 5)	8 Screw connections (M3, 5)
Conductor cross sections		Single-wire 0.5 – 1.5 mm^2 or Stranded wire with ferrule 0.5 – 1.5 mm^2	Single-wire 0.5 – 1.5 mm^2 or Stranded wire with ferrule 0.5 – 1.5 mm^2
Cable entry		1 x M20 x 1.5	3 x M20 x 1.5
Weight		≈ 1.62 kg	≈ 4.21 kg
Installation position		Any	Any
Protection class		IP65 conforming to EN 60529	IP65 conforming to EN 60529
Standards			
VDE 0660 T100, DIN EN 60947-1, IEC 60947-1 VDE 0660 T200, DIN EN 60947-5-1, IEC 60947-5-1			

① Depending on switching system. See Table on Pages 72 – 75.

Double-Spanned Rope Pull Switches

		SI1	SI2
		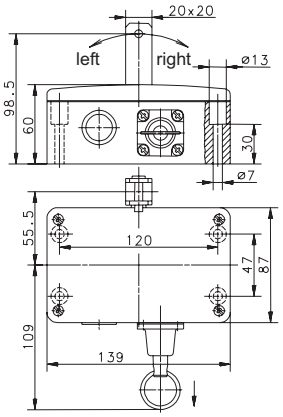	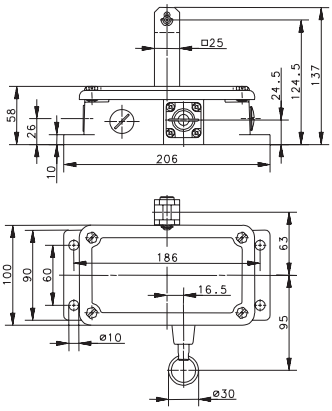
Variant 1	**Article No.** **Designation** Max. span	**6014735001** SI1-U2Z AK R-RAST 2 x 50 m 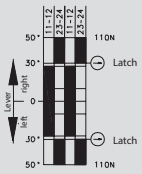	**6015735002** SI2-U2Z AK R-RAST 2 x 50 m 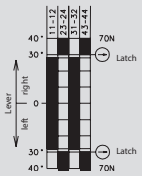
Variant 2	**Article No.** **Designation** Max. span	**6014735025** SI1-U1Z/U1Z AK R-RAST 2 x 50 m 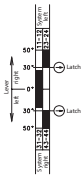	
Variant 3	**Article No.** **Designation** Max. span		

Technical Data		
Rated insulation voltage U_i max.	250 V AC	400 V AC
Rated operating voltage U_e max	240 V	240 V
Conventional thermal current I_{the}	10 A	10 A
Utilisation category U_e/I_e	AC-15, 240 V/3 A	AC-15, 240 V/3 A
Approvals		

Notes

Standard Rope Pull Switches

With and Without Latching Function

SEK

SEM2

SIEM2

SD

SID

SID

SIN

SGC

SI88

Because of their specifications governed by corresponding standards (see Cable Safety Pull Switches SRM/SR), these cable pull switches are used exclusively as command devices.

These switches are available in metal enclosures as well as in insulation-enclosed versions. They are operated manually by pulling on the attached cable.

Thanks to their pretension, these switches, which feature a switching contact with overlap, execute a switching function when the cable is pulled or in the event of cable breakage.

The field of application for these rope pull switches includes

- Opening and closing of (garage) doors
- Starting machines
- Issuing commands in production processes

The basic design of the standard rope pull switches is based on that of position switches.

The specified cable length refers to the maximum length at minimum temperature variation. The maximum cable length may decrease under different environmental conditions.

BERNSTEIN

Technical data		SEK	SiEK	SEM2	SiEM2
Electrical data					
Rated insulation voltage	U_i	400 V AC	400 V AC	400 V AC	400 V AC
Rated operating voltage	U_e	240 V	240 V	240 V	240 V
Conventional thermal current	I_{the}	10 A	10 A	10 A	10 A
Utilisation category	U_e / I_e	AC-15, U_e /I_e 240 V / 3 A	AC-15, U_e /I_e 240 V / 3 A	AC-15, U_e /I_e 240 V / 3 A	AC-15, U_e /I_e 240 V / 3 A
Mechanical data					
Switching frequency max.		≤ 50/min.	max. 100/min.	max. 50/min.	max. 50/min.
Mechanical service life		1 x 10^6 switching cycles	1 x 10^6 switching cycles	1 x 10^6 switching cycles	1 x 10^6 switching cycles
B10d		on request	on request	on request	on request
Short-circuit protection		Fuse 10 A gL/gG	Fuse 10 A gL/gG	Fuse 10 A gL/gG	Fuse 10 A gL/gG
Protection class		II, Insulated	II, Insulated	I	I
Ambient temperature		– 30°C to + 80°C	– 30°C to + 80°C	– 30°C to + 80°C	– 30°C to + 80°C
Protection class		IP65 conforming to IEC/EN 60529	IP65 conforming to EN 60529	IP65 conforming to EN 60529	IP65 conforming to EN 60529; DIN VDE 0470 T1
Type of connection		4 Screw connections (M3, 5)	4 Screw connections (M3, 5)	4 Screw connections (M3, 5)	Screw connections
Conductor cross sections		Single-wire 0.5 – 1.5 mm^2 or Stranded wire with ferrule 0.5 – 1.5 mm^2	Single-wire 0.5 – 1.5 mm^2 or Stranded wire with ferrule 0.5 – 1.5 mm^2	Single-wire 0.5 – 1.5 mm^2 or Stranded wire with ferrule 0.5 – 1.5 mm^2	Single-wire 0.5 – 1.5 mm^2 or Stranded wire with ferrule 0.5 – 1.5 mm^2
Enclosure		Thermoplastic, glass fibre-reinforced	Thermoplastic, glass fibre-reinforced	Aluminium pressure die-casting	Aluminium pressure die-casting
Cable entry		1 x M20 x 1.5	1 x M20 x 1.5	1 x M20 x 1.5	1 x M20 x 1.5
Standards					
VDE 0660 T100, DIN EN 60947-1, IEC 60947-1 VDE 0660 T200, DIN EN 60947-5-1, IEC 60947-5-1					

Technical data		SD	SiD	SIN	SGC	Si88
Electrical data						
Rated insulation voltage	U_i	400 V AC	400 V AC	400 V AC	400 V AC	250 V AC
Rated operating voltage	U_e	240 V	240 V	240 V	240 V	240 V
Conventional thermal current	I_{the}	16 A	16 A	10 A	10 A	10 A
Utilisation category	U_e / I_e	AC-15, U_e /I_e 240 V / 3 A	AC-15, U_e /I_e 240 V / 3 A	AC-15, U_e /I_e 240 V / 3 A	AC-15, U_e /I_e 240 V / 3 A	AC-15, U_e /I_e 240 V / 3 A
Mechanical data						
Switching frequency max.		≤ 20/min.	max. 20/min.	≤ 20/min.	≤ 20/min.	≤ 50/min.
Mechanical service life		1 x 10^6 switching cycles	1 x 10^6 switching cycles	1 x 10^6 switching cycles	1 x 10^6 switching cycles	1 x 10^6 switching cycles
B10d		on request	on request	on request	on request	on request
Short-circuit protection		Fuse 10 A gL/gG	Fuse 10 A gL/gG	Fuse 10 A gL/gG	Fuse 10 A gL/gG	Fuse 10 A gL/gG
Protection class		I	I	I	I	I
Ambient temperature		– 30°C to + 80°C	– 30°C to + 80°C	– 30°C to + 80°C	–30°C to + 80°C	–30°C to + 80°C
Protection class		IP65 conforming to EN 60529	IP65 conforming to EN 60529	IP65 conforming to EN 60529	IP65 conforming to EN 60529	IP65 conforming to EN 60529
Type of connection		Screw connections	Screw connections	Screw connections	Screw connections	Screw connections
Conductor cross sections		Single-wire 0.5 – 1.5 mm^2 or Stranded wire with ferrule 0.5 – 1.5 mm^2	Single-wire 0.5 – 1.5 mm^2 or Stranded wire with ferrule 0.5 – 1.5 mm^2	Single-wire 0.5 – 1.5 mm^2 or Stranded wire with ferrule 0.5 – 1.5 mm^2	Single-wire 0.5 – 1.5 mm^2 or Stranded wire with ferrule 0.5 – 1.5 mm^2	Single-wire 0.5 – 1.5 mm^2 or Stranded wire with ferrule 0.5 – 1.5 mm^2
Enclosure		Aluminium pressure die-casting	Aluminium pressure die-casting	Aluminium pressure die-casting	Aluminium pressure die-casting	Thermoplastic, glass fibre-reinforced
Cable entry		2 x M20 x 1.5	2 x M20 x 1.5	2 x M20 x 1.5	1 x M20 x 1,5	1 x M20 x 1,5
Standards						
VDE 0660 T100, DIN EN 60947-1, IEC 60947-1 VDE 0660 T200, DIN EN 60947-5-1, IEC 60947-5-1						

Standard Rope Pull Switches

		SIEM2 RAST	SID RAST
		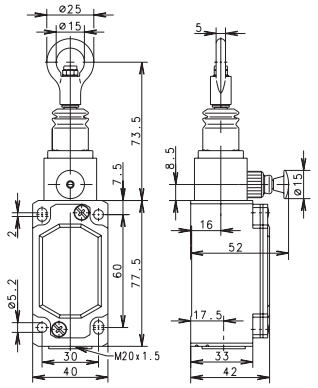	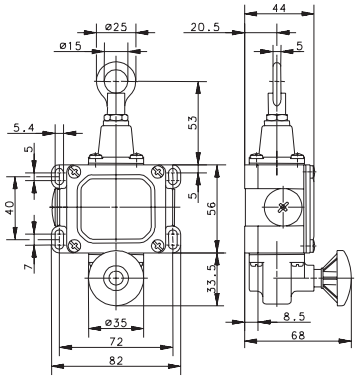
Variant 1	**Article No.** Designation Max. span	**6012831023** SIEM2-UV1Z P-RAST 6 m 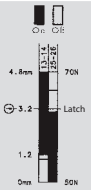	**6011411868** SD-U1 P-RAST 8 m 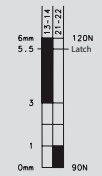
Variant 2	**Article No.** Designation Max. span		**6111431060** SID-UV1Z P-RAST 15 m 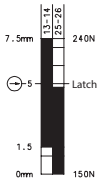
Variant 3	**Article No.** Designation Max. span		**6011431869** SID-UV1Z P-RAST 12 m 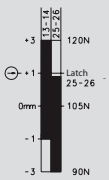

Technical data		
Rated insulation voltage U_i max.	400 V AC	400 V AC
Rated operating voltage U_e max	240 V	240 V
Conventional thermal current I_{the}	10 A	16 A
Utilisation category U_e/I_e	AC-15, 240 V/3 A	AC-15, 240 V/3 A

SID RAST

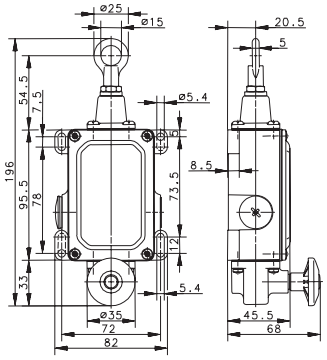

6112431050
SID-UV1Z P-RAST
35 m

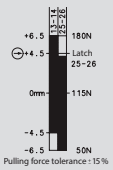

6012441907
SID-UV2Z P-RAST
18 m

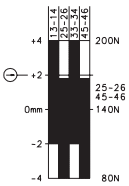

400 V AC
240 V
16 A
AC-15, 240 V/3 A

SIN RAST

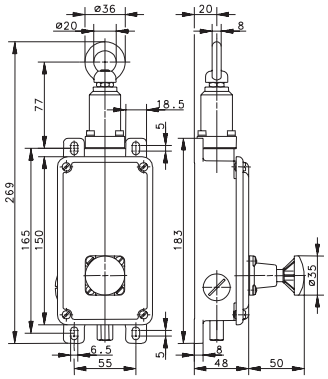

6013531367
SIN-UV1Z P-RAST
60 m

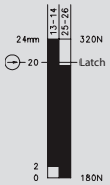

SGC

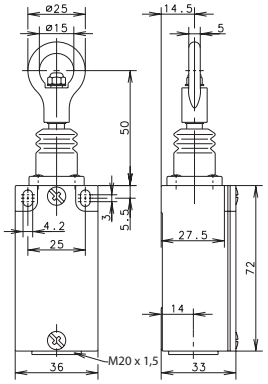

6011211908
SGC-U1Z
4 m

400 V AC
240 V
10 A
AC-15, 240 V/3 A

400 V AC
240 V
10 A
AC-15, 240 V/3 A

Standard Rope Pull Switches

		SEK/SIEK	SEM/SIEM2
		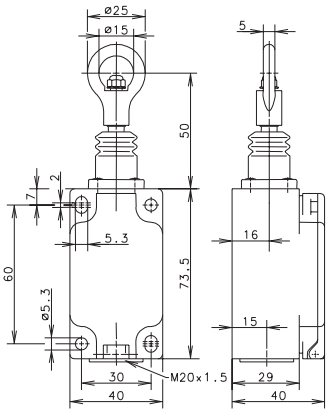	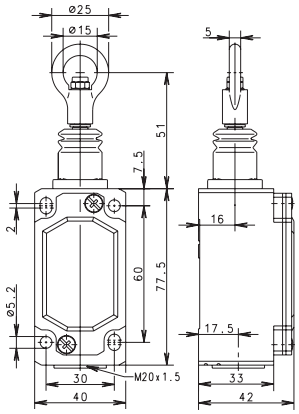
Variant 1	**Article No.** Designation Max. span	**6011811133** SEK-U1Z 6 m 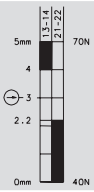	**6012811029** SEM2-U1Z 6 m 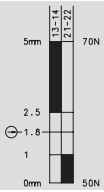
Variant 2	**Article No.** Designation Max. span	**6011831134** SIEK-UV1Z 4 m 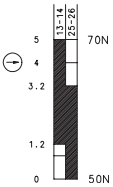	**6012831022** SIEM2-UV1Z 6 m 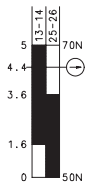
Variant 3	**Article No.** Designation Max. span		

Technical data		
Rated insulation voltage U_i max.	400 V AC	400 V AC
Rated operating voltage U_e max	240 V	240 V
Conventional thermal current I_{the}	10 A	10 A
Utilisation category U_e/I_e	AC-15, 240 V/3 A	AC-15, 240 V/3 A

SD	SID	SID
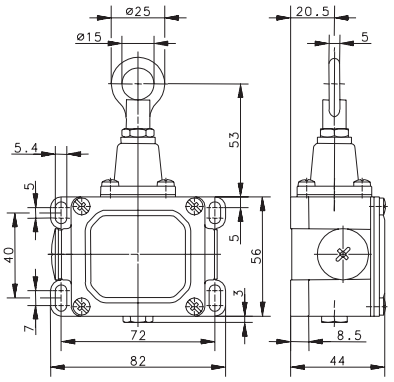	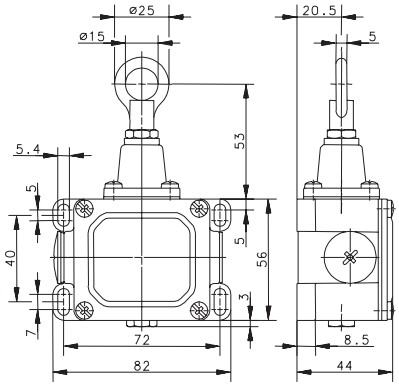	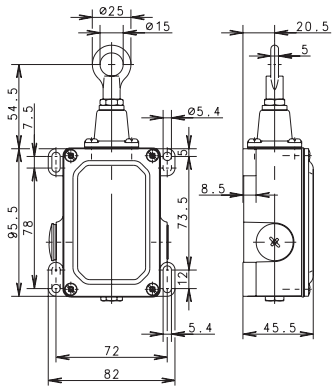
6011411856 SD-U1 8 m 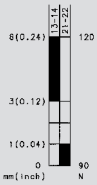	**6011431857** SID-UV1Z 4 m 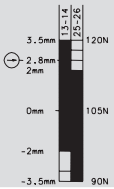	**6012431877** SID-UV1 8 m 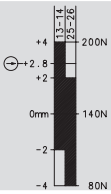
6111411029 SD-U1 6 m 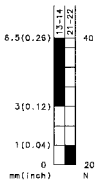	**6111431022** SID-UV1Z 8 m 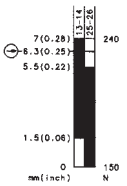	
6111411161 SD-U1 6 m	**6111431069** SID-UV1Z 12 m 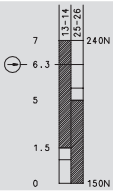	
400 V AC	400 V AC	500 V AC
240 V	240 V	240 V
16 A	16 A	16 A
AC-15, 240 V/3 A	AC-15, 240 V/3 A	AC-15, 240 V/3 A

Notes

Accessories for Rope Pull Switches

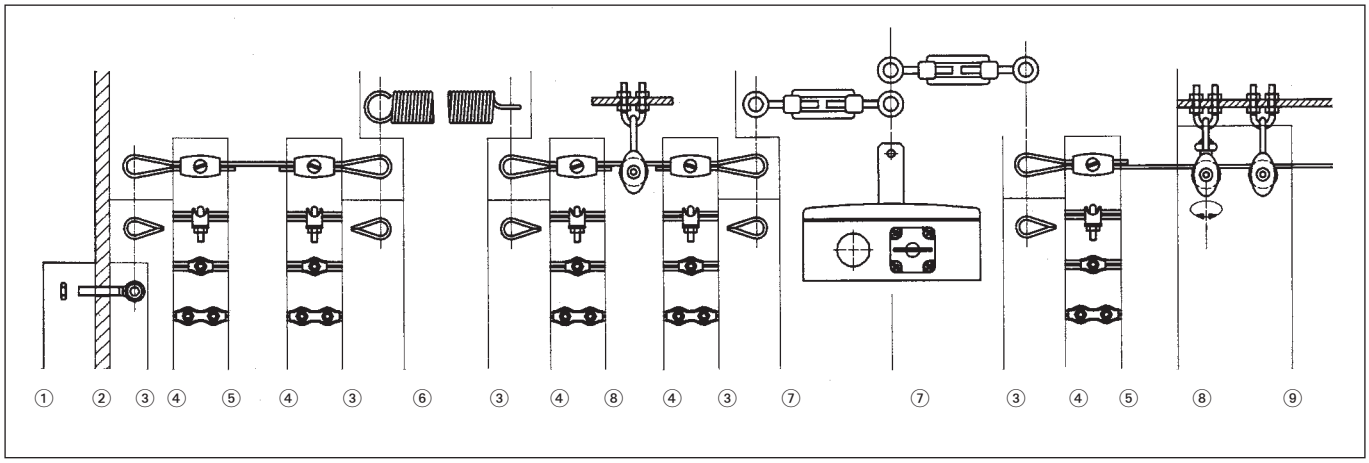

① Nut

Size		Strength class	Art. No.
M 6	DIN 439T2	A2-70	**2600439090**
M 8	DIN 439T2	04	**2600439187**
M 10	DIN 934	8	**2600934092**
Coating: Thick-layer passivated (M 8/M 10), RoHs-compliant			

② Eye bolt

Size	Strength class	Art. No.
M 10 x 50	4.6	**2600444076**
M 6 x 50	4.6	**2600444185**
M 8 x 50	4.6	**2600444186**
Coating: Thick-layer passivated, RoHs-compliant		

③ Cable eye stiffener

Size		Art. No.
D 2.5	to DIN 65457	**2696899013**
D 3	to DIN 65457	**2696899014**
D 4	to DIN 65457	**2696899015**
D 5	to DIN 6899B	**2696899001**
Material: Steel strip		
Coating: Blue passivated, RoHs-compliant		

④ Cable grip

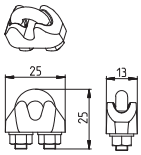

Size	Art. No.
D5	**2690741002**
Material: GTW/steel	
Coating: Yellow chromated, RoHs-compliant	

④ Cable grip, oval

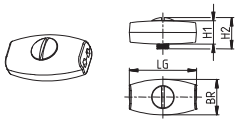

Size	LG	BR	H1	H2	Art. No.
2	28 mm	15 mm	11 mm	13 mm	**2690000004**
3	28 mm	15 mm	12 mm	13 mm	**2690000005**
4	34 mm	20 mm	14 mm	18 mm	**2690000006**
Material: Refined zinc cast alloy					
Coating: Blue passivated, RoHs-compliant					

④ Cable grip, simplex

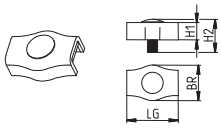

Size	LG	BR	H1	H2	Art. No.
2	15 mm	12 mm	5 mm	11 mm	**2690000007**
3	17 mm	14 mm	6 mm	14 mm	**2690000008**
4	20 mm	17 mm	7 mm	16 mm	**2690000009**
Material: Steel strip					
Coating: Blue passivated, RoHs-compliant					

Accessories for Rope Pull Switches

④ Cable grip, duplex

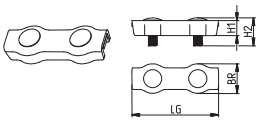

Size	LG	BR	H1	H2	Art. No.
2	35 mm	12 mm	5 mm	11 mm	**2690000010**
3	35 mm	14 mm	6 mm	14 mm	**2690000011**
4	40 mm	17 mm	7 mm	16 mm	**2690000012**
Material: Steel strip					
Coating: Blue passivated, RoHs-compliant					

⑤ Cable

Cable Ø / Sheath Ø	Design	Minimum breaking strength		Art. No.
D 1,8 / D 5	Similar to DIN 3055	275 kp		**3699100008**
D 2 / D 2.5	to DIN 3055	239 kp		**3699100024**
D 3 / D 4	to DIN 3055	538 kp	Ideal for Quickfix (QF)	**3699100025**
D 4 / D 5	to DIN 3055	957 kp		**3699100026**
Material: Fibre-core galvanised, strength 1770 N/mm²				
Sheathing material: PVC, red				

⑥ Compression spring, eye shape to DIN 1479

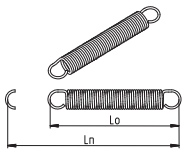

Fo	Fn	R	Lo	Ln	Art. No.
18 N	296 N	1.269 N/mm	188 mm	408 mm	**3652100331**
24 N	354 N	2.466N/mm	180 mm	314 mm	**3652100332**
13.3 N	153 N	0.694 N/mm	185 mm	387 mm	**3652100211**
35.2 N	450 N	3.490 N/mm	201 mm	319 mm	**3652100198**
Material: Wire to DIN 2076 - 1.4310					

⑦ Pull cable spring

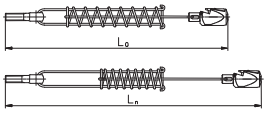

Fn	R	Lo	Ln	Art. No.
218 N	2.1 N/mm	383 mm	487 mm	**3911042153**
335 N	1.9 N/mm	483 mm	653 mm	**3911042154**
Material: Wire to DIN 2076 – 1.4310, cable grip – zinc pressure die-cast alloy, eye bolt to DIN 444 – 4.6				
Coating: Thick-layer passivated (except spring), RoHs-compliant				

⑦ Turnbuckle sleeve

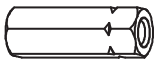

Size	Art. No.
M 6	**2601479188**
M 8	**2601479189**
Material: Steel, min. tensile strength 330 N/mm²	
Coating: Blue passivated, RoHs-compliant	

⑦ Turnbuckle similar to DIN 1480 with two eyes

Eyes	Art. No.
M 5 x 50	**2691480016**
M 6 x 60	**2691480017**
Material: Steel, forged	
Coating: Blue passivated, RoHs-compliant	

⑧ Pulley block, swivel version

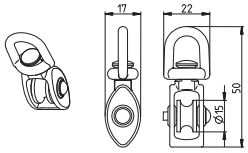

Art. No.
2690000023
Material: Zink pressure die-cast alloy (pulley polyamide)
Coating: Blue passivated, RoHs-compliant

⑧ Pulley block, fixed version

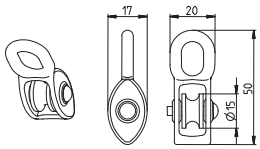

Art. No.
2690000022
Material: Zink pressure die-cast alloy (pulley polyamide)
Coating: Blue passivated, RoHs-compliant

⑨ Mounting bracket for pulley to DIN 1142

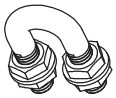

Art. No.
3911751437
Material: Steel
Coating: Blue passivated, RoHs-compliant

Deflection pulley ø 75 mm for cable diameter up to 8 mm

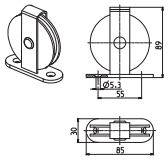

Art. No.
2690000051
Material: Steel/polyamide
Coating: Blue passivated, RoHs-compliant

Belt alignment switch

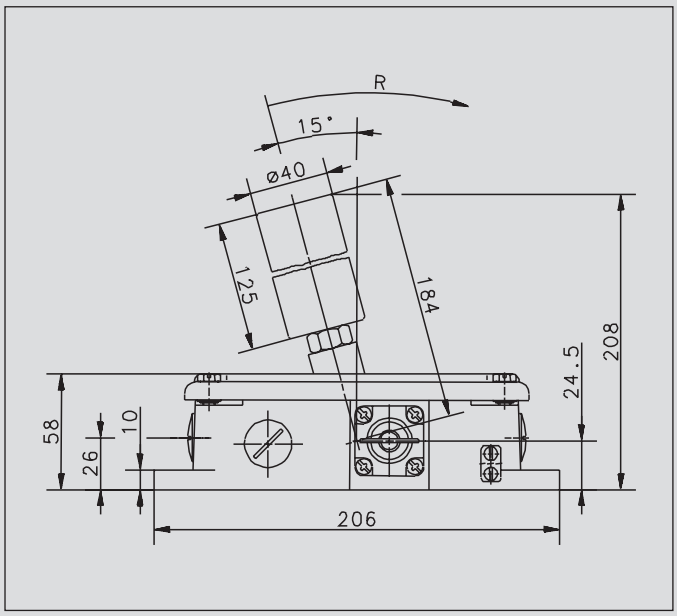

Metal-enclosed belt alignment switches for monitoring conveyor belts

In conveyor belt applications, the safety switch prevents conveyor belts from being damaged or being destroyed as the result of the belt running off track. When the roller lever is deflected by a conveyor belt running off track the safety contacts in the switch engage, thus shutting down the conveyor belt.

Only after eliminating the cause of the malfunction can the system be restarted by means of the pull release (key ring).

The roller lever is mounted in ball bearings. The cast iron enclosure has three M20 x 1.5 cable entries ready for through-wiring. The belt alignment switch is equipped with 2 normally-open contacts and 2 positive opening NC contacts ⊖. Thanks to its sturdy design, the device guarantees continuous trouble-free operation even under extreme operating conditions.

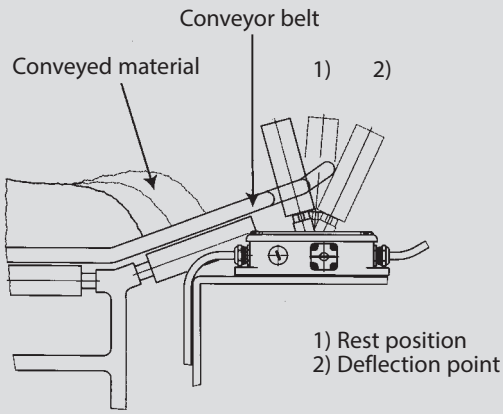

Product selection

Part number	Designation
6015736003	Si2-U2Z AW R-Rast

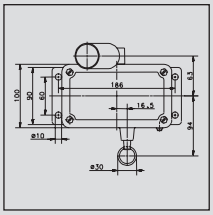

Technical data

Electrical data		
Rated insulation voltage	U_i max.	400 V
Rated operating voltage	U_e max.	240 V AC
Conventional thermal current	I_{the}	10 A
Utilisation category	U_e /I_e	AC-15, U_e /I_e 240 V / 3 A
Positive opening action	⊖	as per IEC/EN 60947-5-1, Addendum K
Short-circuit protection		Fuse 10 A gL/gG
Protection class		I
Mechanical data		
Enclosure	Cast iron	
Cover	Cast iron	
Actuation	Roller lever	
Ambient temperature	– 30°C to + 80°C	
Contact type	2 NC / 2 NO contact (Zb)	
Resetting the lock	Pulling the keyring (< 50 N)	
Mechanical service life	2 x 10^6 switching cycles	
Switching frequency max.	≤ 10 / min.	
Mounting	4 x M8	
B10d	4 mill.	
Type of connection	Screw connections	
Conductor cross sections	Single-wire 0.5 – 1.5 mm^2 or Stranded wire with ferrule 0.5 – 1.5 mm^2	
Cable entry	3 x M20 x 1.5	
Weight	≈ 4.1 kg	
Installation position	Any	
Protection class	IP65 conforming to IEC/EN 60529	
Standards		
VDE 0660 T100, DIN EN 60947-1, IEC 60947-1 VDE 0660 T200, DIN EN 60947-5-1, IEC 60947-5-1		

1–3 Pedal Foot Switches

Tailored to your applications – the modular foot switch concept from BERNSTEIN!

BERNSTEIN offers you a wide range of foot switches to meet exacting requirements in industrial applications.

From one to three pedals in versions with or without a protective hood (UN) to prevent unintentional operation of the switch, the sturdy all-metal enclosure has a protection class of IP65 as standard. The modular design enables you to define pedal functions with up to four switching combinations per pedal to suit your specific application.

Additional functions and equipment, in combination with the basic enclosures and switching elements, open up further control and function variants up to BG (operational health and safety)-approved foot switches with and without mechanical latching.

The respective designation precisely describes the function of the BERNSTEIN foot switches.

- **Type**
  Example:
  F1, F2, F3
- **Number and type of contact elements**
  Specified from right to left for multi-pedal switches.
  Example: ***F3-U1/SU1/U2***
- **Number and type of contact elements**
  These features are denoted in the type designation directly after the corresponding switching element.
  Example with latching and pressure point: ***F3-U1/SU1 Y/U2 D***

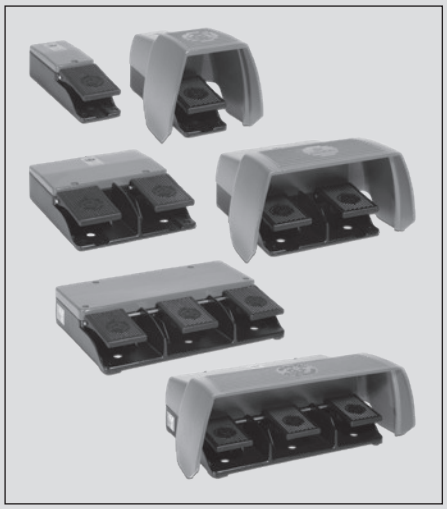

Fig. 1

Three basic enclosures

The range of foot switches comprises:

- Three basic enclosures of the same length and height with different width dimensions for one (F1), two (F2) and three (F3) pedals

Cover panel or protective hood

The aluminium enclosures can be optionally equipped with an aluminium cover panel or a protective hood (UN).

Protective hood *UN* for *F1/F2/F3/FH*

The aluminium pressure die-cast protective hood (F3: aluminium sand casting) fully shields the pedal at the top and sides while the wide base provides a high degree of stability. It reliably prevents accidental operation from above by falling objects or careless operation from the side.

The interior of the cover is prepared ready to accommodate additional elements:

- Emergency stop button
- Contactor on standard mounting rail as main power switch
- Customer-specific built-in equipment

Mounting holes, rubber feet and separators

The mounting holes make it possible to anchor the foot switch to the floor.

Each foot switch is equipped with four rubber feet to prevent it slipping.

The separators on multi-pedal foot switches prevent several pedals being inadvertently operated simultaneously (version without separators available on request).

Type F1–F3 foot pedals are made from a thermoplastic material.

Switching function *U1Z, SU1Z, A2Z, ...*

Depending on the application, momentary-contact or snap-action systems from the BERNSTEIN modular system can be used individually or as a combination. Potentiometer (RG) versions are available for control applications.

Latch-action switching *Y*

After initially pressing the pedal, the switch setting is retained even after the pedal is released. The contact is not interrupted before the pedal is pressed again (bistable).

Pressure point *D*
(Fig. 2)

Momentary-contact switching with pressure point using two built-in elements with different lead settings.

- Pedal pressed up to pressure point: Switching position for first contact element
- Pedal pressed as far as it will go beyond the pressure point: Switching point for second contact element, the first contact element remains switched on.

Switching element with controller output *RG*

An integrated potentiometer enables infinitely variable control tasks to be performed via a controller output corresponding to the pedal position. A microswitch is additionally activated to provide potential isolation when at rest or in end position. Provisions are made for two microswitches for rest and end position deactivation. The standard potentiometer has a rating of 10 Ω/0.5 W. Other types on request.

Fig. 2

Emergency Stop impact button *NA*
(Fig. 3)

Since the foot switch is often used in locations other than on the actual machines or systems, an Emergency Stop impact button is directly available to the operator on the command unit.

Power contactor *LS*

To accommodate analytical applications it is necessary to combine an auxiliary power switch with a main power switch. In line with the cost-effective design and to enable wiring without the need for an additional switch box, this version features a contactor mounted directly on a standard mounting rail in the hooded enclosure.

Hinged protective hood *UK* for *F1*

The cast aluminium protective hood UK, which must be raised with the foot before the pedals can be operated, is optionally available for the F1 enclosure to provide protection against falling objects and inadvertent pedal operation.

Pedal lock *AT* for *F1/F2/F3*
(Fig. 4)

The pedal cannot be operated before the locking lever is released with the foot. This prevents inadvertent actuation of the pedals even in the event of strong vibration / shaking caused by incorrect handling.

Footrest *FST* for *F1/F2/F3*

Applying effective workplace ergonomics to establish the right foot position (heel) is invaluable in prolonged working procedures. The wedge-shape prevents inadvertent operation.

The cast aluminium footrest can also be used under the harshest environmental conditions and, with corresponding inter-linking and screw connections, it can be used together with all types of foot switch. Approved by the Swedish Accident Prevention Commission.

Enclosure specifications (on request)

- Paint finish to customer specification
- Colour of pedals
- Customer logos are possible on the UN protective hood and / or pedal
- Screen print / colour on cover with pedal function or logo
- Enclosure without separators for simultaneous pedal operation
- Additional elements with wider pedals, e.g. On / Off button in pedal or in UN protective hood
- Complete units with cable / plug connection

Ex versions

Complete units with corresponding approvals are available (see EX).

Safety foot switch

Safety lock with manual release

- **Pedal pressed up to pressure point (Fig. 6):**
  The make contact is closed and the work process is started.

- **Pedal pressed beyond resistance of the pressure point in an emergency situation (Fig. 6):**
  The make contact is interrupted and locked, the work process is interrupted. In this phase the lock remains in the Off position even when the pedal is not pressed. This reliably prevents uncontrolled restart of the machine or moving parts.

- **Release:**
  Only after the hazardous situation has been remedied does manual release (pushbutton on the side of the enclosure) release the contacts again and the work process can be restarted by pressing the pedal as far as the pressure point.

Types with one-channel and two-channel safety function are available.

NC	Normally-closed contact
NO	Normally-open contact
W	Changeover contact
M	Signalling contact
SiPf	Safety function on foot switches with mechanical lock

Fig. 3

Fig. 4

Fig. 5

1–3 Pedal Foot Switches

Ordering Instructions

Type		Pedal 1		Pedal 2		Pedal 3		Additional equipment
F1	–	Switching element	Additional function					Equipment
F2	–	Switching element	Additional function	Switching element	Additional function			Equipment
F3	–	Switching element	Additional function	Switching element	Additional function	Switching element	Additional function	Equipment
Example								
F3	–	U1		SU1 Y		U2 D		UN

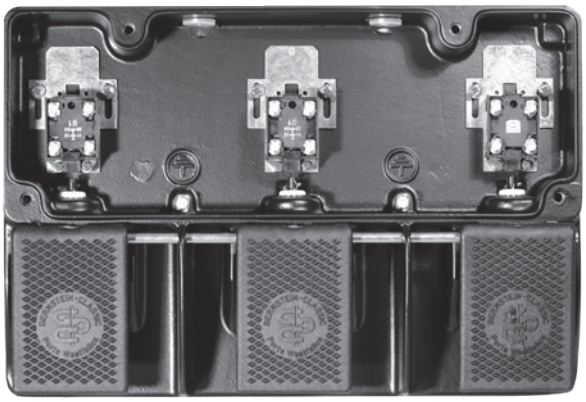

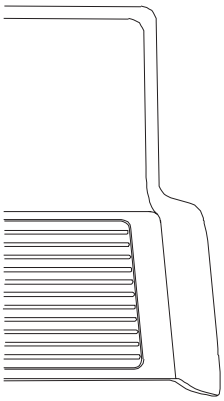

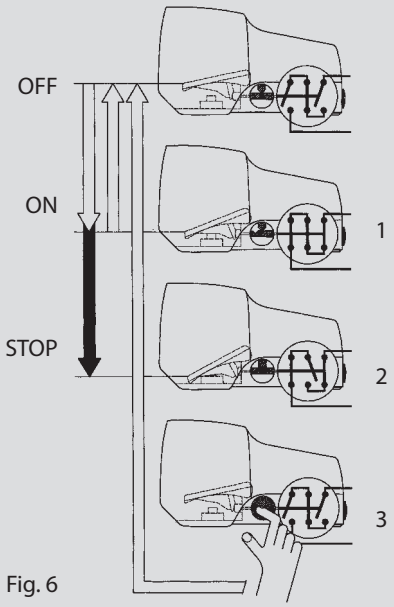

Fig. 6

Description of safety function on foot switches with mechanical lock

Technical data

Electrical data		
Rated insulation voltage	U_i max.	400 V AC
Rated operating voltage	U_e max.	240 V
Conventional thermal current	I_{the}	10 A
Utilisation category		AC-15, U_e /I_e 240 V / 3 A
Mechanical data		
Switching frequency		max. 50/min.
Mechanical service life	Off-On (-Off) Off-On-Stop-Off	10 x 10^6 switching cycles 1 x 10^6
B10d		On request
Short-circuit protection		Fuse 10 A gL/gG (Slow-action contacts) Fuse 2 A gL/gG (Snap-action contacts)
Protection class		I
Ambient temperature		– 30 °C to + 80 °C
Protection class		IP65 conforming to IEC/EN 60529
Type of connection		Contact screws
Conductor cross sections		Single-wire 0.5 – 1.5 mm^2 or Stranded wire with ferrule 0.5 – 1.5 mm^2
Enclosure		AL
Standards		
VDE 0660 T100, DIN EN 60947-1, IEC 60947-1 VDE 0660 T200, DIN EN 60947-5-1, IEC 60947-5-1		

First DGUV approved enable foot switch

The BERNSTEIN three-stage-enable foot switch combines robust design and advanced technology. With many years of experience and expertise, BERNSTEIN is the prefered partner for industrial foot switches in industrial applications. Through the development of the first approved enable foot switch, BERNSTEIN succeeded again to convert this experience and expertise into customer value and to set new standards in safety technology.

The enable foot switch provides two enable contacts and one signalling contact and is available with or without latch. If the pedal is pressed up to pressure point, the two enable contacts are closed. If the pedal is released, the enable contacts are open again. If the pedal is pressed up to the pressure point, the enable positive opening action contacts are opened. For the application of an enable device, the rules DIN EN ISO 12100 and DIN EN 60204-1 apply.

Fig. 7

Switching diagram with optional PNP sensor

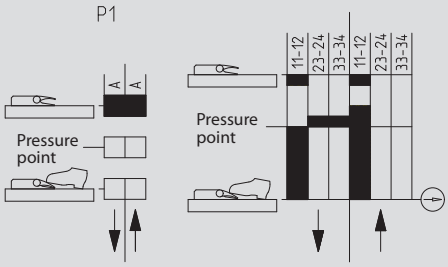

Example of a switching diagram with static position monitoring in position 1

Thanks to this signalling contact, a dynamic position detection is possible. Alternatively, a static position detection can be realised by means of a PNP sensor. It is thus possible to determine the actuation position one - the OFF position of the enable contacts (the actuator is not pressed) - or the position three - the OFF position of the operating contacts (the actuator is fully pressed).

The approved enable foot switch is only available with cover.

Mobility handling for foot switches

The mobility handle option is a complementary accessory for the one (F1) and two (F2) pedal versions. Modification to the foot switch is not required and can be retrofitted.

Fig. 9

Foot switch with controller output (analogue output)

This version of foot switch has a variable controlling current and voltage output that is directly proportional to the pedal position. A teachable signalling output is additionally activated if a certain pedal position which has been adjusted before has been reached. The analogue output can be delivered in a 0–5 V, 0–10 V, 0–20 mA or 4–20 mA version. The foot switch is available in single pedal version. Two and three pedal versions on request.

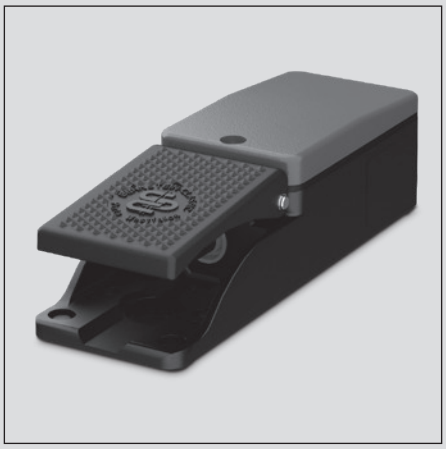

Fig. 8

1–3 Pedal Foot Switches

Product selection

F1 Snap-action contacts

Article number	Designation	Switching contacts Pedal 1	Pressure point Pedal 1	Protective hood	Special feature
6061300011	F1-SU1Z	1NC/1NO	–	–	–
6061400061	F1-SU2Z	2NC/2NO	–	–	–
6061800012	F1-SU1Z UN	1NC/1NO	–	UN	–
6161800073	F1-SU1ZD UN	1NC/1NO	200 N	UN	–
6061900062	F1-SU2Z UN	2NC/2NO	–	UN	–
6061900433	F1-SU2ZD UN	2NC2NO	200 N	UN	–

F1 Slow-action contacts

Article number	Designation	Switching contacts Pedal 1	Pressure point Pedal 1	Protective hood	Special feature
6061100005	F1-U1Z	1NC/1NO	–	–	–
6061200003	F1-U2Z	2NC2NO	–	–	–
6061200007	F1-U2ZD	2NC/2NO	200 N	–	–
6061600006	F1-U1Z UN	1NC/1NO	–	UN	–
6061600010	F1-U1ZD UN	1NC/1NO	200 N	UN	–
6061700004	F1-U2Z UN	2NC/2NO	–	UN	–
6061700008	F1-U2ZD UN	2NC/2NO	200 N	UN	–

F1 with additional functions

Article number	Designation	Switching contacts Pedal 1	Pressure point Pedal 1	Protective hood	Special feature
6161000306	F1-SU1ZDA 1Z UN	1M/SiPf	460 N	UN	Latching
6161500686	F1-SU1Z/UV1ZD	SiPf	460 N	–	Latching, side sealed cable gland
6161000203	F1-SU1Z/UV1ZD UN	SiPf	200 N	UN	Latching, side sealed cable gland
6161000443	F1-UV1Z/UV1ZD	2SiPf	200 N	–	Latching, side sealed cable gland
6161100554	F1-U1Z AT	1NC/1NO	–	–	Pedal lock
6161800482	F1-SU1Z AT UN	1NC/1NO	–	UN	Pedal lock
6161700483	F1-U2Z AT UN	2NC/2NO	–	UN	Pedal lock
6061100001	F1-U1Y	1NC/1NO	–	–	Bistable
6161000676	F1-A2 Y	2NC	–	–	Bistable
6161800247	F1-SU1Y UN	1NC/1NO	–	UN	Bistable
6061800436	F1-SU1Z-LS22-UN	1NC/1NO	–	UN	Power contactor
6061800439	F1-SU1Y-LS22-UN	1NC/1NO	–	UN	Bistable and integrated power contactor
6061600435	F1-U1Z NA2 UN	1NC/1NO	–	UN	Emergency Stop button in cover
6161700091	F1-U2Z UN FST	2NC/2NO	–	UN	Footrest
6161300327	F1-SU1 MI RG 10K2W	1W	–	–	Potentiometer 10K2W
6161800662	F1-SU1 MI RG 5K0.5W UN	1W	–	UN	Potentiometer 5K0,5W
6161800645	F1-SU1 MI RG 10K0.5W UN	1W	–	UN	Potentiometer 10K0,5W

Enable foot switch F1

Article number	Designation	Switching contacts Pedal 1	Pressure point Pedal 1	Protective hood	Special feature
6061500559	F1-ZSD	1NC / 2NO	200 N	–	Pressure point D
6061500567	F1-ZSDR	1NC / 2NO	200 N	–	Pressure point D, Latching R
6061500569	F1-ZSP1D	1NC / 2NO	200 N	–	Additional board 1*, Pressure point D
6061500570	F1-ZSP3D	1NC / 2NO	200 N	–	Additional board 3**, Pressure point D

Slow-action and snap-action contacts are mixed in the special type table. The snap-action contacts are identified by the S in the contact element designation (e.g. SU1)!
* Additional board PNP for determination of switching position 1 ** Additional board PNP for determination of switching position 3

F1 Foot switch with controller output

Article number	Designation
6161500723	F1-AU0-5
6161500724	F1-AU0-10
6161500725	F1-AI0-20
6161500726	F1-AI4-20

Article number	Designation	Special feature
6161000727	F1-AU0-5 UN	Prot. shroud UN
6161000728	F1-AU0-10 UN	Prot. shroud UN
6161000729	F1-AI0-20 UN	Prot. shroud UN
6161000730	F1-AI4-20 UN	Prot. shroud UN

Mobility handling for foot switches

Article number	Designation
3996000229	F1-TV
3996000230	F2-TV

Product selection

F2 Snap-action contacts

Article number	Designation	Switching contacts		Pressure point		Protective hood	Special feature
		Pedal 1	Pedal 2	Pedal 1	Pedal 2		
6062330021	F2-SU1Z/SU1Z	1NC/1NO	1NC/1NO	–	–	–	–
6062440065	F2-SU2Z/SU2Z	2NC/2NO	2NC/2NO	–	–	–	–
6062830022	F2-SU1Z/SU1Z UN	1NC/1NO	1NC/1NO	–	–	UN	–
6162000418	F2-SU1Z/SU2ZD UN	1NC/1NO	2NC/2NO	–	460 N	UN	–
6062830417	F2-SU1ZD/SU1ZD UN	1NC/1NO	1NC/1NO	200 N	200 N	UN	–
6062940066	F2-SU2Z/SU2Z UN	2NC/2NO	2NC/2NO	–	–	UN	–
6162000503	F2-SU4ZD/SU4ZD UN	4NC/4NO	4NC/4NO	200 N	200 N	UN	–

F2 Slow-action contacts

Article number	Designation	Switching contacts		Pressure point		Protective hood	Special feature
		Pedal 1	Pedal 2	Pedal 1	Pedal 2		
6062110013	F2-U1Z/U1Z	1NC/1NO	1NC/1NO	–	–	–	–
6062220015	F2-U2Z/U2Z	2NC/2NO	2NC/2NO	–	–	–	–
6062220019	F2-U2ZD/U2ZD	2NC/2NO	2NC/2NO	200 N	200 N	–	–
6062610014	F2-U1Z/U1Z UN	1NC/1NO	1NC/1NO	–	–	UN	–
6162610253	F2-U1ZD/U1Z UN	1NC/1NO	1NC/1NO	140 N	–	UN	–
6062620086	F2-U1Z/U2ZD UN	1NC/1NO	2NC/2NO	–	200 N	UN	–
6062710376	F2-U2ZD/U1Z UN	2NC/2NO	1NC/1NO	200 N	–	UN	–
6062720016	F2-U2Z/U2Z UN	2NC/2NO	2NC/2NO	–	–	UN	–
6062720020	F2-U2ZD/U2ZD UN	2NC/2NO	2NC/2NO	200 N	200 N	UN	–
6162000651	F2-SU1ZA2ZD/SU1Z UN	3NC/1NO	1NC/1NO	460 N	–	UN	–

F2 with additional functions

Article number	Designation	Switching contacts		Pressure point		Protective hood	Special feature
		Pedal 1	Pedal 2	Pedal 1	Pedal 2		
6162000486	F2-SU1ZUV1ZD/SU1Z UN	1M/ SiPf	1NC/1NO	460 N	–	UN	Safety lock, pedal 1
6162000364	F2-SU1ZSU1ZD/SU1Z UN	2 SiPf	1NC/1NO	200 N	–	UN	Safety lock, pedal 1
6162000338	F2-SU1ZUV1D/SU1ZUV1D UN	SiPf	SiPf	200 N	200 N	UN	Safety lock, pedal 1 and 2
6162000583	F2-UV1ZD/UV1ZD UN RAST	SiPf	SiPf	200 N	200 N	UN	Safety lock, pedal 1 and 2, 2-piece
6062610047	F2-U1Y/U1Z UN	1NC/1NO	1NC/1NO	–	–	UN	Bistable, pedal 1
6162840655	F2-SU1Y/SU2Z UN	1NC/1NO	2NC/2NO	–	–	UN	Bistable, pedal 1
6062610018	F2-U1Y/U1Y UN	1NC/1NO	1NC/1NO	–	–	UN	Bistable, pedal 1 and 2
6162720623	F2-U2ZAT/U2Z UN	2NC/2NO	2NC/2NO	–	–	UN	Pedal lock pedal 1
6162830500	F2-SU1ZAT/SU1ZAT UN	1NC/1NO	1NC/1NO	–	–	UN	Pedal lock pedal 1 und 2
6162720700	F2-U2Z/U2Z NA2 UN	2NC/2NO	2NC/2NO	–	–	UN	Emergency Stop button in cover
6162630452	F2-U2Z/SU1MIRG UN	2Ö/2NO	1NC/1NO	–	–	UN	10K potentiometer on pedal 2

Enable foot switch F2

Article number	Designation	Switching contacts		Pressure point		Protective hood	Special feature
		Pedal 1 (left)	Pedal 2 (right)	Pedal 1 (left)	Pedal 2 (right)		
6062500561	F2-U1Z/ZSD	1NC / 1NO	1NC / 2NO	–	200 N	–	Pressure point D (Pedal 2)
6062500568	F2-ZSDR/ZSDR	1NC / 2NO	1NC / 2NO	200 N	200 N	–	Pressure point D, Latching R

Slow-action and snap-action contacts are mixed in the special type table. The snap-action contacts are identified by the S in the contact element designation (e.g. SU1)!

1–3 Pedal Foot Switches

Product selection

F3 Slow-action contacts

Article number	Designation	Switching contacts			Pressure point			Protective hood	Special feature
		Pedal 1	Pedal 2	Pedal 3	Pedal 1	Pedal 2	Pedal 3		
6063833045	F3-SU1Z/SU1Z/SU1Z UN	1NC/1NO	1NC/1NO	1NC/1NO	–	–	–	UN	–
6163015473	F3-SU1ZUV1D/U1/SU1Z UN	1NC/2NO	1NC/1NO	1NC/1NO	200 N	–	200 N	UN	–
6063111025	F3-U1Z/U1Z/U1Z	1NC/1NO	1NC/1NO	1NC/1NO	–	–	–	–	–
6063611026	F3-U1Z/U1Z/U1Z UN	1NC/1NO	1NC/1NO	1NC/1NO	–	–	–	UN	–
6063612423	F3-U1Z/U1Z/U2Z UN	1NC/1NO	1NC/1NO	2NC/2NO	–	–	200 N	UN	–
6063721262	F3-U2ZD/U2ZD/U1Z UN	2NC/2NO	2NC/2NO	1NC/1NO	200 N	200 N	–	UN	–
6063722171	F3-U2ZD/U2ZD/U2ZD UN	2NC/2NO	2NC/2NO	2NC/2NO	200 N	200 N	200 N	UN	–

F1 – Foot switch with one pedal

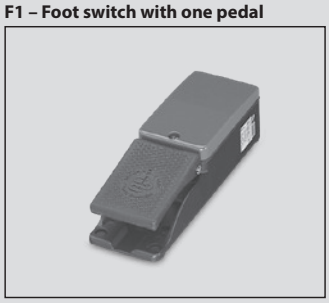

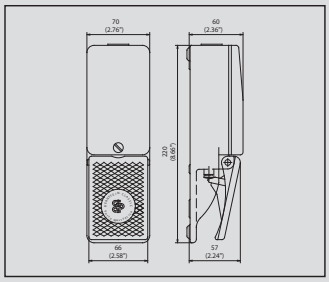

F1 UN – Foot switch with two pedals and protective hood

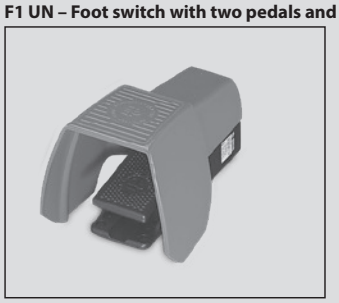

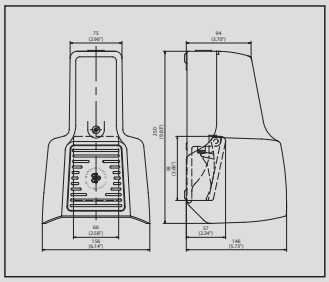

F2 – Foot switch with two pedals

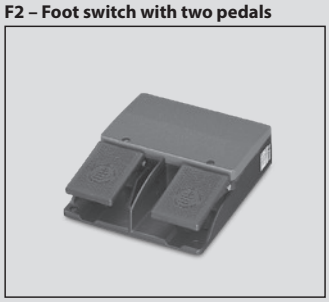

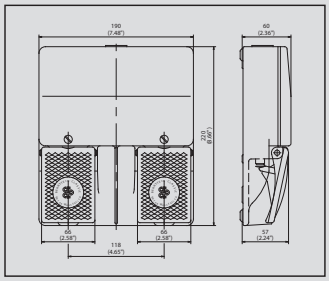

F2 UN – Foot switch with two pedals and protective hood

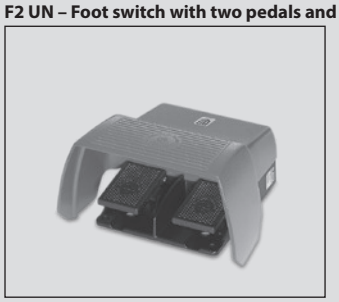

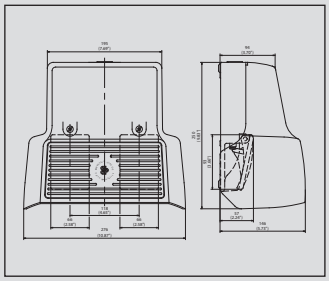

F3 – Foot switch with three pedals

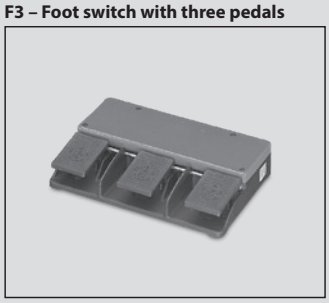

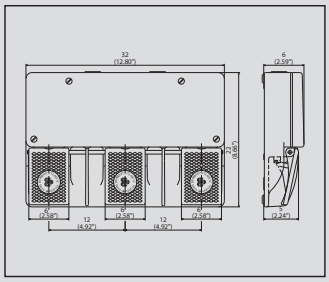

F3 UN – Foot switch with three pedals and protective hood

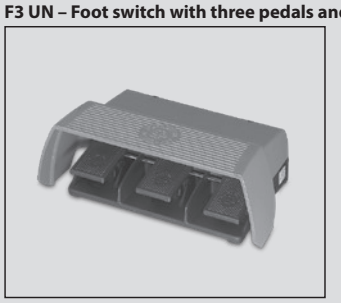

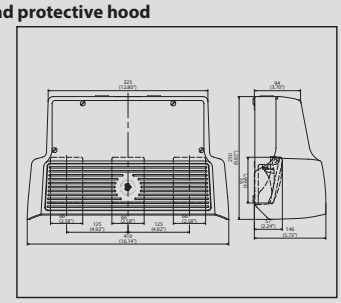

Please find our wide range of foot switches in our new brochure.

SCR – Safety Relay

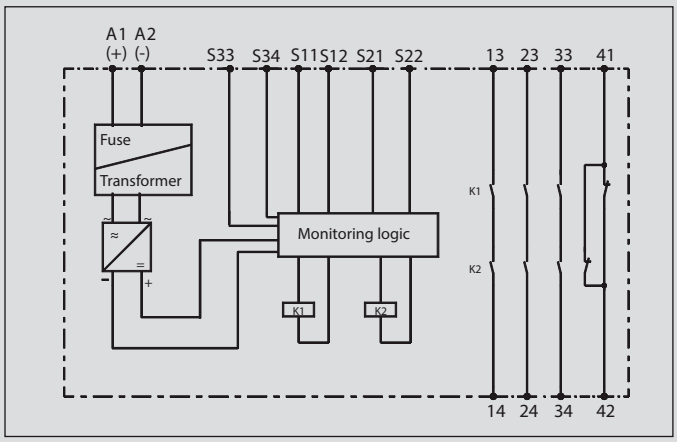

Whether it's safety switches or safety relays, BERNSTEIN has the complete range of products for your application. Our SCR safety relays are used to reliably evaluate signals, such as those generated by BERNSTEIN position switches, safety switches, safety latching devices, safety rope pull switches, safety sensors or 2-hand controllers.

With their compact standard mounting rail enclosure, BERNSTEIN SCR relays impress in a wide variety of applications up to performance level e as defined by EN 13849. Conforming to this standard, the SCR relays monitor the correct position and reliable operation of safety sensors and or contacts in safety switches. This evaluation function is used to actuate power elements such as power contactors or frequency converters and stop machines in the case of emergency.

Two positive opening normally-closed contacts are required as the signalling contacts for safety gate monitors. Virtually all BERNSTEIN switches feature these contacts. They can be identified by the ⊖ symbol.

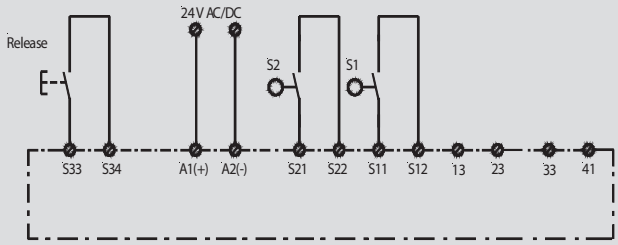

Schematic representation of safety relay system

The product range includes switching relays for evaluating:

- Safety gate monitors with and without monitored start pushbutton
- Expansion module as auxiliary switching circuit for safety relays
- Two-hand controllers
- Auxiliary controller for safety light curtains/barriers

Technical data

Electrical data		
Supply voltage	U_e	24 V AC/DC (6075111020 24V DC)
Voltage range		0,90 ... 1,1 U_e
Frequency		50 ... 60 Hz
Power intake		24 V DC: 3 W, 24 V AC: 5 V A
Performance data		
Conductor cross section		2 x 1.5 mm² / 4 x 1.5 mm²
Contact data		
Switching voltage		230 V AC, 24 V DC
Switching current		5 A
Max. switching power		1250 V A (ohmic load)
Mechanical service life		107 switching cycles
Environmental data		
Ambient temperature		– 25 °C to + 50 °C
Protection class, enclosure		IP40 DIN VDE 0470 Part 1
Protection class, terminals		IP20 DIN VDE 0470 Part 1
Mechanical data		
Enclosure material		Polyamide PA 6.6
Approvals		
TÜV, UL, C-UL		

Product selection

Article number	Designation	Performance Level	Enable current paths (NO contact)	Signalling contact (NC contact)	Monitored start	Start automatic/ pushbutton (manual)	Remarks
6075111009	SCR4-W22-3.5-D	e	3	1	No	Auto / pushbutton	–
6075111010	SCR4-W22-3.5-SD	e	3	1	Yes	Pushbutton	–
6075111015	SCR2-W22-2.5	d	2	0	No	Auto / pushbutton	–
6075111016	SCR2-W22-2.5-S	d	2	0	No	Pushbutton	–
6075111018	SCR4-W22-2.6-D2H	e	2	1	–	–	SCT for two-hand controller
6075111020	SCR ON4-W22-3.6-S	e	3	0	Programmable	Pushbutton	Evaluation device for electro-sensitive protective equipment

AS Interface – Safety at Work

The resounding success of the AS interface (actuator-sensor interface) that operates in accordance with the master-slave principle is attributed by its complete ease of use, its ability to be specifically adapted to the simplest elements in machine and system construction as well as the host of unparalleled application advantages it offers. The AS interface is particularly advantageous against the backdrop of the need to conform to the Machinery Directive 2006/42/EC since 29.12.2009. Performance level e and SIL 3 are achieved effortlessly. It is not always possible to set up safety systems with safety switches connected in series while conforming to EN 13849-1. Such configurations present no problems for the AS interface which provides effective solutions up to the highest performance level.

The unshielded two-wire line that carries data and power renders intricate parallel wiring between sensors and controller unnecessary, thus offering a considerably expanded range of functionality while reducing costs. With piercing technology corresponding field devices, i.e. up to 62 standard / 31 safety devices or a mixed configuration, can be connected using the plug&play principle in any position on the yellow, two-core cable. The AS interface master, acting as an independent gateway to higher bus systems (e.g. Profibus), monitors the bus and cyclically polls the bus users.

As an open-ended standard, AS interface guarantees maximum compatibility while providing significant benefits in terms of overall cost considerations. These benefits are reflected in the substantial time and cost savings achieved for initial installation, retrofitting, converting and maintaining systems as well as significantly reducing hardware outlay.

The safety monitor makes the AS interface into a safety bus. It monitors communication between the slaves and the master. The safety monitor shuts down up to 16 enable circuits as soon as it detects that a safety slave has switched or identifies a fault. A safety-oriented system can be built up by installing a safety monitor and corresponding slaves in an existing AS interface system.

The safety-oriented application is created using the ASIMON program and loaded into the monitor. Programming is carried out by means of simple drag and drop.

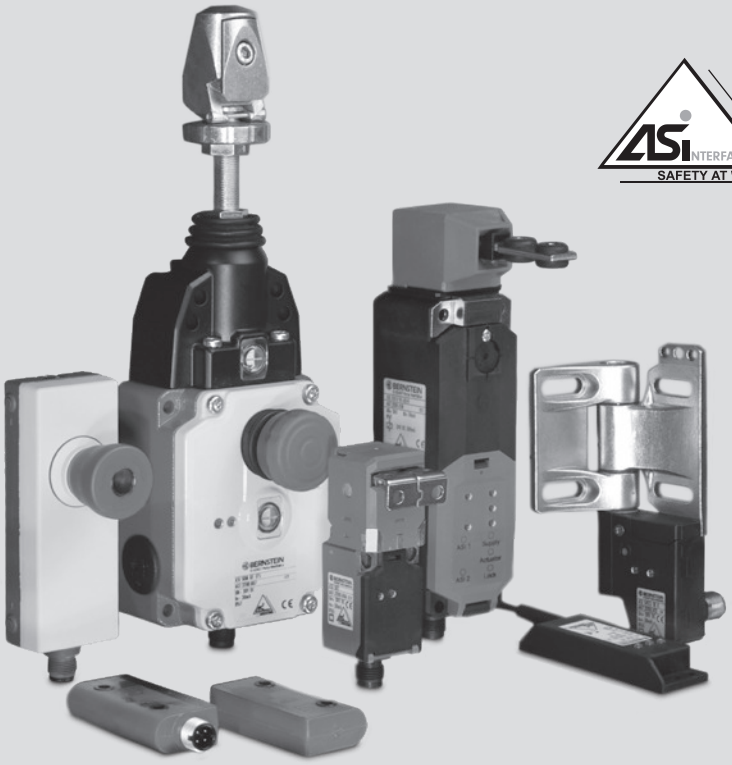

AS interface – from under one roof

With the SHS3, BERNSTEIN offers the first safety hinge switch with AS interface capabilities on the market. Integrated AS interfaces ensure BERNSTEIN components are designed with the smallest possible dimensions. For instance, the mini limit switch Ti2 is the only switch in its class on the market with AS interface capabilities. The safety switch with interlock (SLK) is, of course, also equipped with an AS interface. The BERNSTEIN portfolio focuses on safety-related interlocking devices and emergency stop devices.

Installation advantages through AS-i

- Reduced installation time
- Easy installation thanks to piercing technology (in ribbon cables protected against polarity reversal)
- Safety circuits can be retrofitted and converted by simply plugging in individual slaves
- Changes to safety systems can be quickly implemented by way of software
- Reduced cable requirements, consequently:
  - Small trailing cables
  - Small cable platforms
  - Easy to clean
  - Low fire load
- No terminal boxes
- No need to prepare enclosures, terminals and screw connections

Planning advantages

- Straightforward planning – intricate wiring documents are replaced by clearly arranged bus structure diagrams
  - Safety functions quickly created by drag and drop in ASIMON
  - Printout of safety configuration from programming tool

System advantages

- Uncomplicated interconnection of safety systems in machines used in production lines
- Straightforward implementation of safety system cascading
- Faults in the safety system can be diagnosed with a laptop online
- Diagnostic facilities directly at the master and monitor for exact fault location
- System data / polling can be read out via higher-level bus system: Remote servicing
- Fewer I/Os at controller
- Takes up less space in control cabinet

Economic advantages

- Reduced costs through:
  - Significant reduction in cables
  - Faster installation
  - Fewer circuit diagrams need to be created
  - Faster commissioning
  - Fast troubleshooting
  - Extensive diagnostic facilities

User advantages through reduced:

- Machine downtimes thanks to extensive diagnosis and fast troubleshooting
- Commissioning costs
- Maintenance and servicing expenditure

Further advantages

- Great degrees of freedom in terms of network typology
- Tough even in harsh working environments
- Modularity and perfect integration in higher-level bus systems – an AS interface master can be integrated as a normal slave in a higher-level bus system

Technical data (for all saves)

Electrical data					
Voltage range	U	26.6 ... 31.6 V; via AS interface with polarity reversal pprotection			
Power intake	I	< 30 mA			
AS interface specification		Profile S-0.B			
		IO-Code: IO-Code1:	0 x 0 0 x F	ID-Code: ID-Code2:	0 x B 0 x E
AS interface inputs		Contact 1:	Data bits D0/D1 = static 00 or dynamic code transfer		
		Contact 2:	Data bits D2/D3 = static 00 or dynamic code transfer		
Parameter bits		No function			
Mechanical data					
Display		LEDs for indicating status of ASI slave and bus			
Contact type		2 NC (Slow-action contact, Zb)			
Type of connection		Connector M12 male			
Plug assignment 1		1: AS-i +	2: free		
		3: AS-i –	4: free		
Installation position		Any			
Protection class		IP65 conforming to EN 60529; DIN VDE 0470 T1			
Performance Level					
PL	Conforming to 13849-1	Up to e			
Standards					
VDE 0660 T100, DIN EN 60947-1, IEC 60947-1 VDE 0660 T200, DIN EN 60947-5-1, IEC 60947-5-1 EN 50295, EN ISO 13849-1					

Please refer to the corresponding standard product for further technical data.

AS Interface – Safety at Work

AS-i Slaves

Contactless safety sensors

Magnetic technology — **Type 4 according to ISO 14119**

CSMS Reed

6073200071 AS-i CSMS-R-M-ST
6073200072 AS-i CSMS-R-S
6073200077 AS-i CSMS-R-SET

- Sicherheits-Slave
- Low coded according to ISO 14119
- Schaltzustandsanzeige
- AS-i Status Anzeige
- Verdeckter Einbau möglich
- Unempfindlich gegen Verschmutzung
- Hohe Lebensdauer, da kein mechanischer Verschleiß
- M12 Anschluss

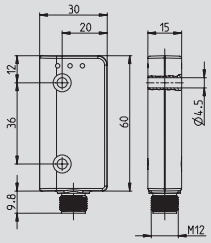

MAK 52

Sensor
6073200068 AS-i MAK 52

Actuator
6402052307 TK-52-CD/2

- Safety slave
- Low coded according to ISO 14119
- Switching status indicator
- AS-i status display
- Suitable for concealed installation
- Suitable for harsh environments
- Non-contact operation gives superior life expectancy

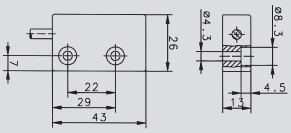

MAK 42

Sensor
6073200067 AS-i MAK 42

Actuator
6402042053 TK-42-CD/2

- Safety slave
- Low coded according to ISO 14119
- Switching status indicator
- AS-i status display
- Suitable for concealed installation
- Suitable for harsh environments
- Non-contact operation gives superior life expectancy

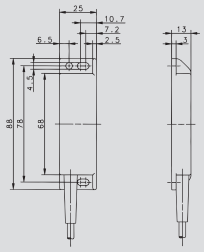

MAK 53

Sensor
6073200091 AS-i MAK 53
6073200092 AS-i MAK 53 ST

Actuator
6402043064
TK-43-CD/2 (plastic)
6408043065
TN-43-CD/2 (stainless steel)

- Safety slave
- Low coded according to ISO 14119
- Switching status indicator
- AS-i status display
- Suitable for concealed installation
- Suitable for harsh environments
- Non-contact operation gives superior life expectancy

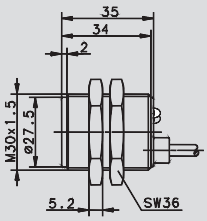

Safety Hinge Switch — **Type 1 according to ISO 14119**

SHS3

Stainless steel hinge:
6073200011 AS-i SHS3 SA R
6073200013 AS-i SHS3 SR R

Die-cast zinc hinge:
6073200081 AS-i SHS3Z SA R
6073200082 AS-i SHS3Z SR R

- Safety slave
- Hinge Switch
- AS-i status display
- Switching point freely adjustable by user over a range of 270°
- Fine adjustment +/– 1,5°
- Freely and repeatedly adjustable switching point
- Stainless steel or die-cast zinc hinge

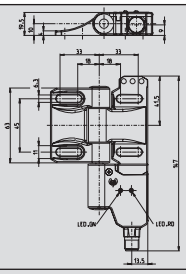

AS-i Slaves

Safety interlock (without actuator) — Type 2 according to ISO 14119

SLK

Locking principle Spring force
6073200058 AS-i SLK-F-R1-A0-0

Locking principle Magnetic force
6073200057 AS-i SLK-M-R0-A0-0

- Safety slave
- Low coded according to ISO 14119
- Interlock switch for safety doors and protective hoods
- Spring force (closed-circuit current) type F and magnetic force (working current) type M
- Status display for the actuating and interlock position
- The status LEDs could alternatively be switched by the control system
- AS-i status display
- Feed-in of the interlock by external power supply system

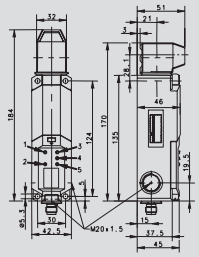

Safety switch with separate actuator — Type 2 according to ISO 14119

SK

6073205050 AS-i SK F30 M
6073205028 AS-i SK M

- Safety slave
- Low coded according to ISO 14119
- Safety switch with separate actuator
- AS-i status display
- Plastic housing
- Variable actuator with two actuator openings

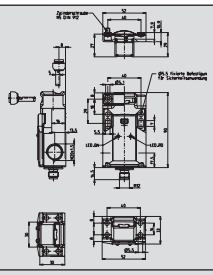

SKT

6073200006 AS-i SKT

- Safety slave
- Low coded according to ISO 14119
- Safety switch with separate actuator
- Slim and short switch design
- AS-i status display
- Plastic housing
- Rotary head in 90° steps
- 2 actuating entries

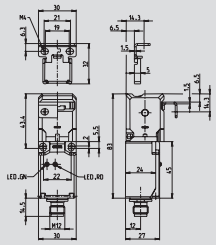

Position safety switches — Type 1 according to ISO 14119

Ti2

6073403020 AS-i Ti2 Hw
6073402019 AS-i Ti2 Riw
6073401018 AS-i Ti2 w

- Safety slave
- Smallest switch with integrated AS Safety at Work interface
- AS-i status display
- Betätiger des Standardprogramms erhältlich
- Plastic housing
- Fixing measures according to DIN EN 50047

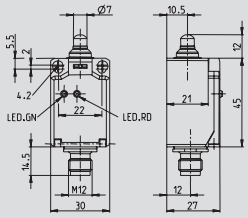

Safety rope-pull switch

SRM

6073200009 AS-i SRM-LU-175
6073200010 AS-i SRM-LU-300
6073200007 AS-i SRM-QF-175
6073200008 AS-i SRM-QF-300

- Safety slave
- Rope-pull switch in metal housing
- AS-i status display
- Tensioned length up to 75 meters (version 300) (37,5 meters version 175)
- Quick-Fix quick action clamping head QF available

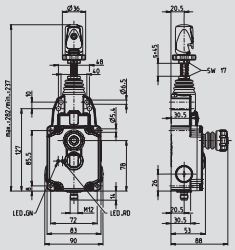

Accessories

Connecting module ❸

6073900042
AS-i CONNECTING MODULE
M12 SCREW

- For connecting AS-i devices on AS-i profile cable with M12 connecting line
- Codification of the M12 connector turnable over a range of 90°

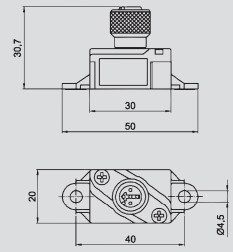

Connecting module ❹

6073900043
AS-i CONNECTING MODULE 2M
M12G

- For connecting AS-i devices on AS-i profile cable with an integrated, 2 meter long, ready-made connecting line and M12 straight connecting box

6073900087
AS-i CONNECTION MODULE 0,3M
M12G

- For connecting AS-i devices on AS-i profile cable with an integrated, 0,3 meters long, ready-made connecting line and M12 straight connecting box

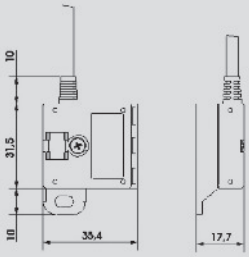

Connecting module

6073900044
AS-i CONNECTING MODULE 2M
M12W

- For connecting AS-i devices on AS-i profile cable with an integrated, 2 meters long, ready-made connecting line and M12 angled connecting box

6073900088
AS-i CONNECTION MODULE 1M
M12W

- For connecting AS-i devices on AS-i profile cable with an integrated, 1 meter long, ready-made connecting line and M12 angled connecting box

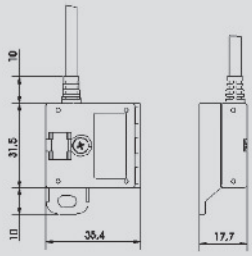

Connecting module + double ❶

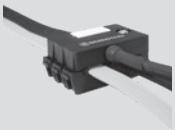

6073900045
AS-i DOUBLE CONNECTING MODULE
0,3M M12G

- For connecting AS-i devices on AS-i profile cable with an integrated, 0,3 meters long, ready-made connecting line and M12 straight connecting box

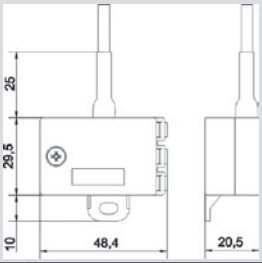

Connecting module + double

6073900046
AS-i DOUBLE CONNECTING MODULE
2M M12W

- For connecting AS-i devices on AS-i profile cable with an integrated, 2 meters long, ready-made connecting line and M12 angled connecting box

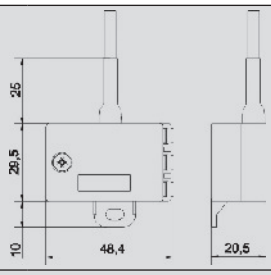

Accessories

Cable bridge ❷

6073900047
AS-i CABLE BRIDGE

- Branch for AS-i profile cable
- The connection under the cables is effected when opening the cover

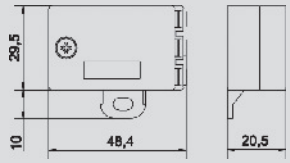

Connecting cable ❺

6073900048
AS-i CONNECTING C.M12 1M G/G

- Connecting cable for the connection of the ASi Slave and the connecting module
- Double-sided ready-made straight M12 connecting units (connector/socket)

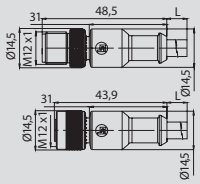

Connecting cable

6073900049
AS-i CONNECTING C.M12 1M G/W

- Connecting cable for the connection of the ASi Slave and the connecting module
- Double-sided ready-made M12 connecting units, straight connector/angled socket

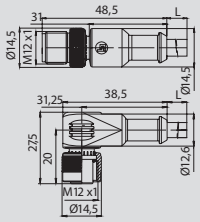

Yellow cable EPDM

6073900040
AS-i CABLE EPDM YELLOW

- Yellow AS-i profile cable EPDM

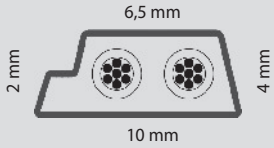

Black cable EPDM

6073900041
AS-i CABLE EPDM BLACK

- Black AS-i profile cable EPDM

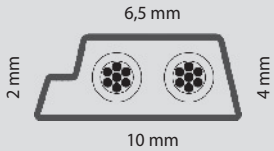

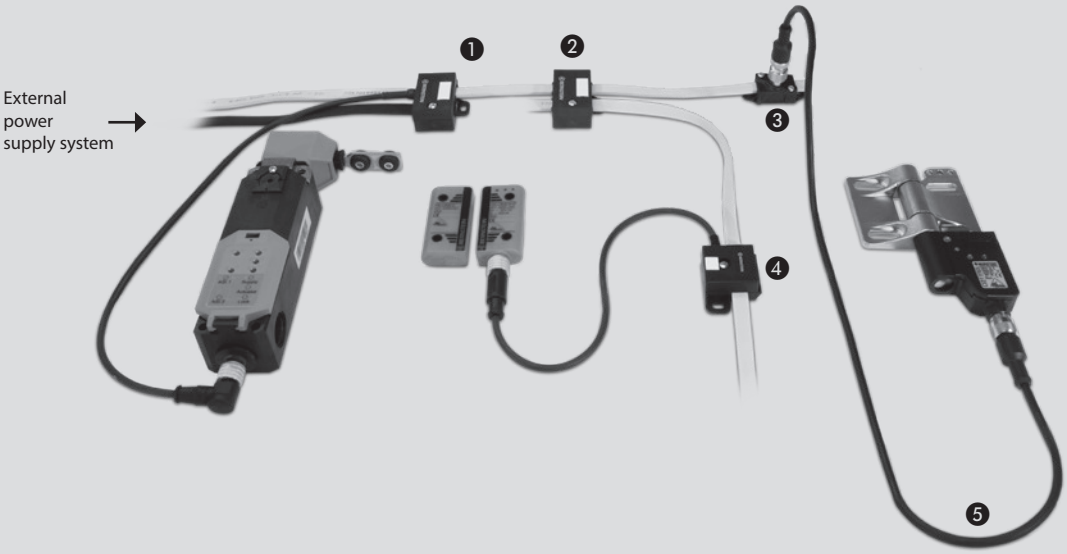

BERNSTEIN

DETECT We make safety happen.

PROTECT We keep your visions safe.

700 0000 901 . 12.2022. We reserve the right to make changes

Contact

International Headquarters
BERNSTEIN AG
Hans-Bernstein-Str. 1
32457 Porta Westfalica
Phone +49 571 793-0
info@bernstein.eu
www.bernstein.eu

China
BERNSTEIN Safe Solutions (Taicang) Co., Ltd.
Phone +86 512 81608180
info@bernstein-safesolutions.cn
www.bernstein-safesolutions.cn

Denmark
BERNSTEIN A/S
Phone +45 7020 0522
info.denmark@bernstein.eu
www.bernstein.dk

Italy
BERNSTEIN S.r.l.
Phone +39 035 4549037
sales@bernstein.it
www.bernstein.it

France
BERNSTEIN S.A.R.L.
Phone +33 1 64 66 32 50
info.france@bernstein.eu
www.bernstein.fr

Austria
BERNSTEIN GmbH
Phone +43 2256 62070-0
office@bernstein.at
www.bernstein.at

United Kingdom
BERNSTEIN Ltd
Phone +44 1922 744999
sales@bernstein-ltd.co.uk
www.bernstein-ltd.co.uk

Switzerland
BERNSTEIN (Schweiz) AG
Phone +41 44 775 71-71
info.schweiz@bernstein.eu
www.bernstein-schweiz.ch

www.bernstein.eu