Bernstein
Bernstein AG
Postfach 1164
D-32437 Porta Westfalica

Technical data sheet

ENK-U1Z DGKw | 618.1127.257

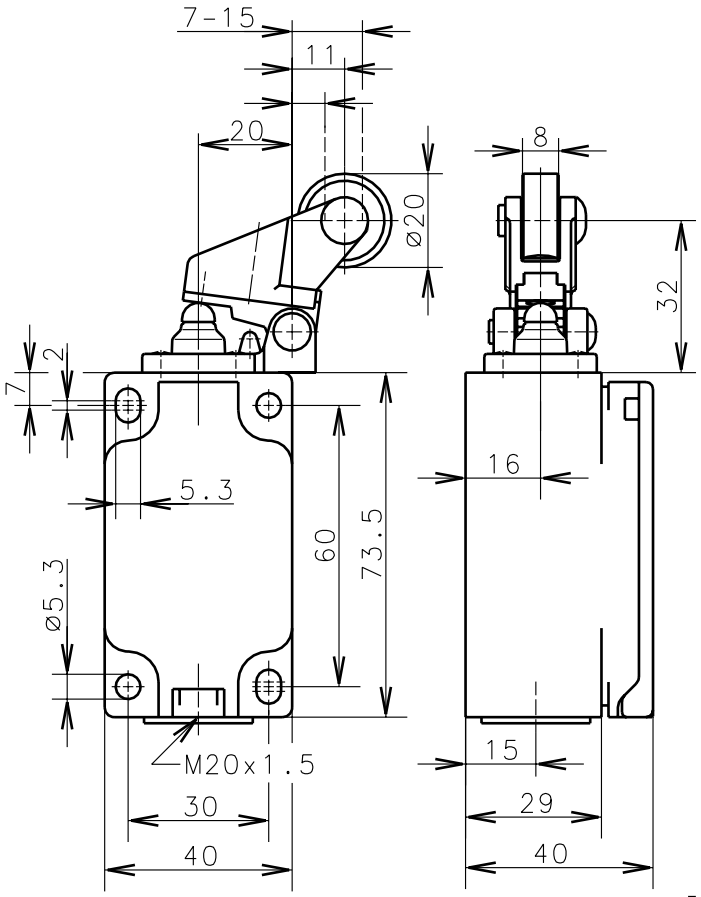

Positive opening operation according to DIN EN 60947-5-1 IEC 60947-5-1

On Off

ISGJ-B211

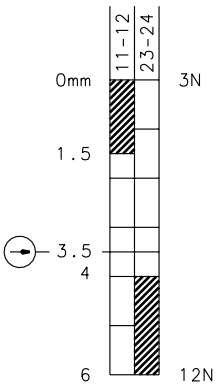

Switching diagram

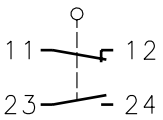

Switching symbol

Tolerance: operating point ±3.5°; operating torque ±10%

Mechanical features

Enclosure:	Thermoplast, glass fibre reinforced
Cover:	Thermoplast, glass fibre reinforced
Actuator:	Lever (Zn-die cast), roller (thermoplast)
Ambient air temperature:	-30°C up to +80°C
Contact type:	1 NC-contact, 1 NO-contact (Zb)
Mechanical life:	10×10^6 switch operations
Switch frequency:	max. 100/min
Mounting:	4 x M5
Connection type:	4 screw connections (M3.5)
Conductor cross-section:	single core 0.5-1.5mm² / Litz wire with connector sleeve 0.5-1.5mm²
Cable entry size:	1 x M20x1.5
Weight:	approx. 0,16kg

Electrical features

Rated insulation voltage:	U_i = 400 V AC
Conventional thermal current:	I_{the} = 10A
Max. inrush current:	according to IEC 60947-5-1, AC 15, A300
Utilization categorie:	AC 15, A300, U_e/I_e 240V/3A
Standards:	according to EN 60947-1; EN 60947-5-1
Protection class (IP-Code):	IP65 according to EN 60529; DIN VDE 0470 T1
CSA:	10A 300V AC, A300 (same polarity)
Short-circuit protection:	Fuse 10A gL/gG, IEC/EN 60947-5-1, appendix K

Approach possibilities

By loosening the 4 screws the Actuation Assembly can be rotated in 90 degree increments such that 4 Actuation directions are possible. The Actuation Assembly is to be again fastened to the housing using the 4 screws.

Remarks

The moving parts should be oiled periodically.
The rated protection class (IP-Code) is valid only at closed cover and when using an at least equivalent cable gland.

Schutzvermerk nach DIN 34 beachten
Copyright reserved

25.09.03

Copies are not retreated in case of alternations.