Bernstein
Bernstein AG
Postfach 1164
D-32437 Porta Westfalica

Technical data sheet: Safety switch

Plastic encapsulated, 3 x M20x1.5, Locked by spring force

Type: SLK-FVTU24UC-55-ARX	Art.-No.: 611.8119.079	Date: 18.03.03

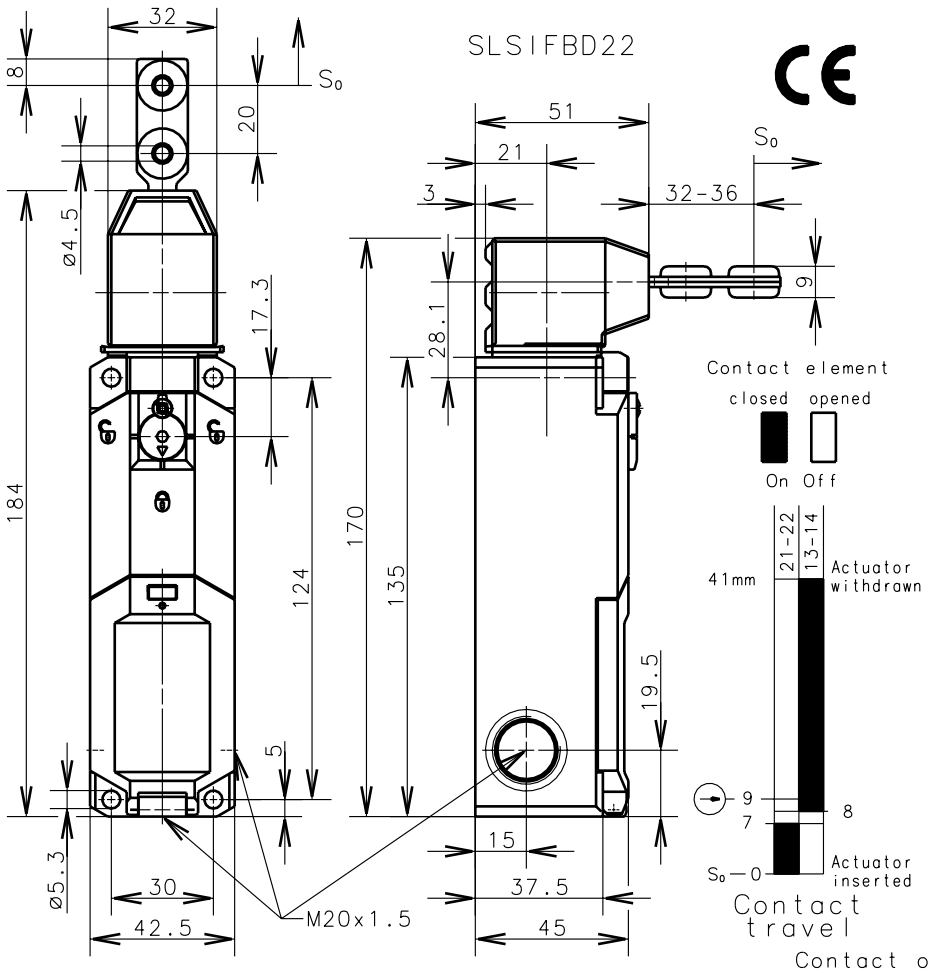

Termination electromagnet
with contact position

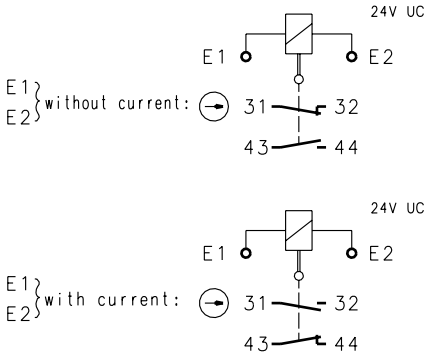

Position monitoring of guard locking

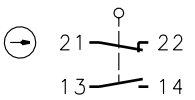

Contact operating force tolerance ±15%

Mechanical features	Electrical features	Approvals:
Enclosure: PA 6 GV (UL94-V0)	Contact elements	UL
Cover: PA 6 GV (UL94-V0)	Rated insulation voltage U_i: 250V	CSA
Actuating head: PA 6 GV/Zn-GD	Utilisation categorie: AC 15 240V/1.5A	
Separated actuator: St/PA	Thermal current: I_{the} 10A	
Ambient air temperature: -13°F up to +158°F	Short-circuit protection: Fuse 10A gL, IEC/EN 60947-5-1, appendix K	
Contact type: 2NC; 2NO		Standards:
Switching principle: 4 slow make and break contact elements	Electro magnets:	VDE 0660 T100, EN 60947-1
	Duty cycle: 100 % ED (at E1;E2)	VDE 0660 T200, EN 60947-5-1
Mechanical life: 1x10^6 operations at max. 600 Switch operations/h	Temperature class: B (130°C)	IEC 60947-5-1
	Inrush power consumption: 56VA (0.2 s)	GS-ET 19
Actuating radius: R=400mm min.	Permanent power consumption: 1.1VA	
Velocity for actuating: V=0.5m/s max.	Switch operations Permanent: max. 600/h	Remarks
Mounting: 4xM5 screws		The rated protection class (IP-Code) is valid only at closed cover and when using an at least equivalent cable gland.
Termination cross section: 1.5mm² flex. max.	Operating voltage: 24V AC/DC	
Terminals: cage tension spring		
Cable entry size: 3 x M20x1.5		
Weight: approx. 0,3kg	Safety instructions	
Protection class (IP-Code): IP67	• Do not use this safety switch as a mechanical end stop!	
Build in location: selectable	• When power is removed from the electromagnet (solenoid) the safety guard will be in locked position!	
Interlocking principle: spring force	• To operate the manual release loosen the screw and turn the hexagonal nut 90°.	
Unlocking: a)magnetic force b)auxiliary release	• 4 different actuating directions achievable by rotating the actuating head.	
Hold on force: 2000N max. acc. to GS-ET 19 (see installation guide)	• Changing between horizontal and vertical actuating direction by setting the actuating head in the requested direction.	
Protected insulation ⧈		

Schutzvermerk nach DIN 34 beachten
Copyright reserved

Copies are not retreated in case of alternations